TRANSPIRATION RATES OF STORED TOMATOES: A MATHEMATICAL AND EXPERIMENTAL ANALYSIS

BY

SUDHIR KARTIKEYA SASTRY

A DISSERTATION PRESENTED TO THE GRADUATE COUNCIL
OF THE UNIVERSITY OF FLORIDA IN
PARTIAL FULFILLMENT OF THE REQUIREMENTS
FOR THE DEGREE OF DOCTOR OF PHILOSOPHY

UNIVERSITY OF FLORIDA

1980

ACKNOWLEDGMENTS

The author wishes to express his sincere appreciation to Dr. G. L. Zachariah, who served as chairman of his graduate committee, for his handling of administrative details and his personal assistance through all stages of this project.

To Dr. D. E. Buffington, who served as the author's advisor, deep appreciation is expressed for his guidance and personal friendship throughout this project.

The author would like to express gratitude to Dr. C. D. Baird, Dr. C. K. Hsieh, Dr. R. K. Irey, and Dr. B. D. Thompson for serving on his graduate committee, and for their invaluable suggestions throughout this research.

The author wishes to express his thanks to Mr. Raymond Pease, Mr. John Weldon and Mr. Clay Olson for their assistance in the experimental phase of the research.

The author would like to thank Dr. Paul Everett of the IFAS Agricultural Research Center in Immokalee for his cooperation in supplying the tomatoes for use in the experiments.

Finally, thanks are extended to the members of the ASHRAE Technical Committee 11.5, without whose financial support and encouragement this research would not have been possible.

TABLE OF CONTENTS

		Page
ACKNOWLEDGMENTS		ii
LIST OF TABLES		vi
LIST OF FIGURES		vii
ABSTRACT		viii
Chapter		
I	INTRODUCTION	1
II	LITERATURE REVIEW	4
	Information Available in the Literature	4
	Discussion of Factors Affecting Transpiration	6
	Water Vapor Pressure Deficit	6
	Air Movement	9
	Respiration	11
	Size, Shape and Surface Area of the Commodity	14
	Surface Structure	15
	Maturity	20
	Effects of Moisture Loss on Skin and Tissue Permeability	24
	Endothermic Effects of Transpiration	28
	Dissolved Substances	32
	High Initial Rates of Water Loss	35
	Seeds	37
	Mathematical Models Available in the Literature	39
	Linear Model	3[illegible]
	Nonlinear Model	4[illegible]
	Summary	42
III	OBJECTIVES	44

Chapter		Page
IV	THEORETICAL ANALYSIS	45
	Treatment of Factors Affecting Transpiration	46
	Water Vapor Pressure Difference	46
	Air Movement	46
	Respiration	47
	Size, Shape and Surface Area	47
	Surface Structure	48
	Maturity	48
	Permeability Changes Due to Moisture Loss	48
	Endothermic Effects of Transpiration	48
	Effect of Solutes	49
	Analysis of Moisture Diffusion Through the Skin of Spherical Fruit	49
	Assumptions	49
	Derivation of Governing Equations	51
	Discussion of Derived Relations	59
	Determination of Parameters	61
	Summary	68
V	EXPERIMENTAL SETUP AND PROCEDURE	69
	Critical Parameters	70
	Experimental Setup	70
	Environmental Control	70
	Measurement Systems	75
	Additional Instrumentation	79
	Advantages and Disadvantages of the Setup	80
	Experimental Procedure	81
	Transpiration and Respiration Rates	82
	Surface Areas, Radii and Skin Thicknesses	84
	Summary of Measurement Methods	85
VI	RESULTS AND DISCUSSION	87
	Directly Measured Parameters	88
	Transpiration Rates	88
	Skin Thickness	91
	Rate of Respiratory Heat Generation	92

Chapter Page

Radius Measurements 92
Surface Areas 95
Air Velocity 97
Fractional Pore Area and Thermal Conductivity 98
Prediction of Transpiration Rates 99
Prediction of General Trends 100
Prediction for Individual Samples 103
Transpiration Coefficient on a Unit Mass Basis 105
Discussion on Nonlinear Trends 105
Miscellaneous 109

VII CONCLUSIONS 111

VIII SUGGESTIONS FOR FUTURE RESEARCH 113

Appendix

A DRIVING FORCE FOR DIFFUSIVE MASS TRANSFER .. 114

B BOUNDARY CONDITION AT EVAPORATING SURFACE .. 117

C ERROR ANALYSIS 120

D ERRORS IN DETERMINATION OF RESPIRATION RATES 134

E CALCULATION OF RESPIRATION RATE 138

F ESTIMATION OF FRACTIONAL PORE AREA..... 141

G ESTIMATION OF THERMAL CONDUCTIVITY OF PORE MATERIAL 143

H CORRECTION OF INITIAL SKIN PARAMETER ESTIMATES 147

I PREDICTION OF TRANSPIRATION RATE 150

REFERENCES 153

BIOGRAPHICAL SKETCH 161

LIST OF TABLES

Table		Page
1.	RELATIVE HUMIDITIES IN EQUILIBRIUM	74
2.	EXPERIMENTAL TRANSPIRATION RATES OF FTE-12 TOMATOES AT VARIOUS ENVIRONMENTAL CONDITIONS	89
3.	RESPIRATORY HEAT GENERATION RATES OF FTE-12 TOMATOES AT THREE STORAGE TEMPERATURES	93
4.	COMPARISON OF PREDICTED TRANSPIRATION RATES WITH VALUES FROM CURVE BEST FIT	101
5.	COMPARISON OF CALCULATED AND EXPERIMENTAL TRANSPIRATION RATES FOR INDIVIDUAL SAMPLES	104
6.	TRANSPIRATION COEFFICIENTS ON A PER UNIT MASS BASIS	106

LIST OF FIGURES

Figure		Page
1.	Deviation of experimental curve from linear model	26
2.	Diagram of idealized fruit, with pores	52
3.	Longitudinal section through an idealized pore	52
4.	Schematic diagram of experimental setup for environmental control	71
5.	Walk-in chamber with Aminco Aire unit for environmental control	72
6.	Test chambers located within walk-in chamber	72
7.	Schematic diagram of measurement system	76
8.	Sampling unit with inlet and outlet manifolds, solenoid valves and cam timer	77
9.	Measurement system with sampling unit, dew point hygrometer at bottom right, drying tubes and carbon dioxide absorption bottles	77
10.	Graph of experimentally determined transpiration rates versus apparent water vapor pressure difference	90
11.	Graph of surface area versus mass for FTE-12 tomatoes	96
12.	Graph of predicted transpiration rate versus actual water vapor pressure difference	102
13.	Illustration of behavior of saturation line in the range of the test	108

Abstract of Dissertation Presented to the Graduate Council of the University of Florida in Partial Fulfillment of the Requirements for the Degree of Doctor of Philosophy

TRANSPIRATION RATES OF STORED TOMATOES:
A MATHEMATICAL AND EXPERIMENTAL ANALYSIS

By

Sudhir Kartikeya Sastry

August, 1980

Chairman: Gerald L. Zachariah, Ph.D.

Major Department: Mechanical Engineering

Transpiration, or moisture transfer from fresh fruits and vegetables to the ambient air, is a major cause of loss during storage, handling and marketing of these perishable commodities. Losses occur not only due to reduction in salable weight, but due to quality deterioration as well. A thorough understanding of all factors affecting transpiration would help in accurate prediction of moisture loss rates, so that conditions for refrigerated storage could be optimized, and storage systems could be better designed to maintain quality.

It was found, from a review of the literature, that the major factors affecting transpiration rates in storage were water vapor pressure difference, air velocity, product respiration rate, product size and shape, surface structure

of the product, maturity, time after harvest and the concentration of soluble solids within the fruit. Other phenomena identified as requiring consideration were evaporative cooling effects and skin permeability changes due to moisture loss.

From the above considerations, a mathematical model was developed for the prediction of transpiration rates of spherically shaped fruits covered with a skin that was largely impervious in nature. The model considers all the factors listed except maturity and time of harvest, the effects of which are difficult to quantify. The analysis considers evaporative and diffusive phenomena through a single pore of the fruit, and the result is summed over all the pores. The model consists of two equations: one for the determination of transpiration rate, and the other for accurate calculation of temperature of the evaporating surface corresponding to the calculated transpiration rate. If two skin parameters--the fractional pore area and the thermal conductivity of the pore material--are known, transpiration rates can be calculated by iterative use of the two equations in the model.

The experimental work consisted of determination of the skin parameters. Batches of tomatoes of the FTE-12 variety were placed within four controlled environments at the same temperature but different relative humidities.

Measurements of moisture loss, respiration rate, dew point and dry bulb temperature were made. In all, data were obtained at 3 storage temperatures and therefore 12 test environments. Surface areas of 144 fruit were measured in an attempt to develop an empirical relation for direct estimation of surface area from mass. Fruit radii and skin thicknesses were measured for use in the mathematical model. The skin parameters were calculated from transpiration data at two different environmental conditions.

The average value of the fractional pore areas was found to be 0.000317, indicating that only a very small fraction of the surface could be considered as porous. The thermal conductivity of the pore material was found to be 1.652 cal/cm hr°C.

Using the values of the skin parameters, theoretical predictions were made for transpiration rates at the other tested environmental conditions. The predicted values were compared to the measured data, and the two were found to be in close agreement. Furthermore, the model helped to account for the nonlinear trend in transpiration rate with vapor pressure difference that had been observed in the literature. A slight decreasing trend was observed in the mean fractional pore area with increasing vapor pressure difference, but the trend was not found to be statistically significant.

Other results presented include an empirical relation between fruit surface area and fruit mass, and a list of transpiration coefficients of FTE-12 tomatoes on a per unit mass basis.

CHAPTER I

INTRODUCTION

Maintenance of quality in freshly harvested fruits and vegetables is essential from an economic standpoint, and represents a constant challenge to food engineers and post-harvest horticulturists. The challenge of maintaining quality is basically one of prolonging life. The processes that are so essential for the maintenance of life in horticultural products are also those which cause deterioration and eventually, cessation of physiological functions. The only solution appears to be a minimization of the rate of life processes of the fruit or vegetable, without causing damage of disease in the application of such methods of minimization. However, even if the commodity in question is nutritionally acceptable after a period of storage, it may not be salable due to an unattractive physical appearance. Thus, a very important economic consideration is the maintenance of salability.

Transpiration, or moisture transfer from fresh fruits and vegetables to the ambient air, is a major cause of loss, both in terms of salable weight and salable quality. Some moisture loss is inevitable and can be tolerated to some extent. However, many fruits and vegetables will appear shriveled or wilted after a water loss of only a small

percentage (3% to 5%) of their original weight. In many cases, the loss may be great enough to cause the commodity to shrivel, impair the flavor and texture and lower market quality.

Moisture losses can be restricted in many cases by waxing or packaging. However, it is still necessary to maintain some avenues for gaseous interchange between the commodity and the environment in order that respiratory processes may proceed normally. Another method of reducing transpiration would be storage in an environment nearly saturated with water vapor, but such environments are highly conducive to the growth of decay-producing microorganisms. Storage under precisely saturated conditions has been found to inhibit microorganism growth, but weight loss occurs even under these conditions.

In addition to contributing to deterioration of stored products, moisture losses constitute a large part of the latent heat load in refrigerated storage. Another situation where transpiration becomes an important consideration is precooling, where the product is sometimes exposed to very high water vapor pressure gradients.

A thorough understanding of this mechanism of moisture transfer would help in accurate prediction of moisture losses. Thus, conditions for refrigerated storage could be optimized, and storage systems could be designed to maintain the initial quality of the produce for a longer

period of time. Such predictions would also help in making economic decisions on scheduling of refrigerated shipments.

Variables affecting transpiration have been known for some time, but relatively little work has been done on the quantification of these variables for accurate prediction. This research is aimed at identification of all variables associated with transpiration, and the development of a mathematical model for prediction of the same. Due to the large number of variables involved, the mathematical model and experimentation are done on a single commodity. The commodity chosen for study is the tomato (Lycopersicon esculentum, cultivar FTE-12) which is convenient for study in that its shape can be approximated as spherical. In addition, the tomato possesses a relatively impervious and uniform skin layer, which is representative of many fruit types. The mathematical model developed for transpiration of tomatoes is used as a predictor, and the values obtained from it are compared with experimental data to test model accuracy.

CHAPTER II

LITERATURE REVIEW

Information Available in the Literature

The fruits and vegetables considered in the literature search for transpiration rates were apples, brussels sprouts, cabbage, carrots, celery, grapefruit, grapes, leeks, lemons, lettuce, onions, oranges, parsnips, peaches, pears, plums, potatoes, rutubagas, and tomatoes. Transpiration of fruits and vegetables in storage is a topic that has not received much attention in the general area of fruit and vegetable storage, as respiration has been of greater interest to most researchers. There was information in the literature regarding the transpiration rates of each of these fruits and vegetables. However, the transpiration behavior of most of these fruits and vegetables has not been thoroughly investigated. Information is especially scarce in the cases of commodities such as brussel sprouts, celery, leeks, lemons, lettuce, parsnips, peaches, plums and rutabagas. There is a relative abundance of literature on the transpiration behavior of apples and potatoes; some of which is very thorough. This, however, is not to imply that a more complete investigation of the transpiration rates of apples and

potatoes is not needed. Since no single researcher appears to have considered all factors affecting transpiration, it would be desirable to approach the problem with a knowledge of all currently known variables.

Before further discussion of transpiration, it is appropriate to define some of the common terminology. Some frequently used terms are defined.

The transpiration coefficient of a fruit or vegetable is the mass of moisture transpired per unit surface area of commodity, per unit water vapor pressure difference per unit time, and is assumed to be a property of the commodity only. In many cases involving practical application, the inconvenience in measurement of surface areas of irregularly shaped commodities necessitates that there be an alternate definition. Thus, transpiration coefficients may sometimes be expressed per unit mass of the commodity instead of per unit surface area.

The transpiration rate of a fruit or vegetable is the mass of moisture transpired per unit surface area of the commodity per unit time. This quantity, too, is sometimes expressed per unit mass of the commodity rather than per unit surface area. The transpiration rate of a given commodity will, of course vary significantly with the water vapor pressure difference, among other factors.

Discusssion of Factors Affecting Transpiration

There are numerous factors that affect transpiration rates or transpiration behavior of stored fruits and vegetables. There are also a number of phenomena associated with transpiration. The following is a discussion of these factors and phenomena and their relationships to transpiration. The discussion is based on important information obtained from this literature review.

Water Vapor Pressure Deficit

Transpiration, defined as a process of moisture transfer through evaporation and diffusion, is governed by temperatures and relative humidities. Fruits and vegetables typically contain from 80 to 95% water depending on the species. This water is contained in the intercellular spaces of the fruits and vegetables, and hence, it may be assumed that this internal atmosphere is in a saturated condition. Transpiration is brought about primarily by a difference in the water vapor pressure in the interior of the fruit or vegetable, and the water vapor pressure of the environment. The vapor pressure within the commodity, when fresh, is commonly thought to depend solely on the temperature of the commodity, while the vapor pressure of the surroundings is affected by its temperature and humidity. The transpiration rates of fruits and vegetables have been

observed by nearly all researchers to have a linear relationship to the vapor pressure deficit. In considering the transpiration process, it is generally important to consider the vapor pressure of the product at its surface temperature, as it is here that the actual process occurs.

If the temperature of the product is higher than that of the surroundings, transpiration will occur even if the surrounding environment is saturated, since the vapor pressure within the product is higher. On the other hand, if the temperature of the environment is higher than that of the product, the transpiration rate will be governed by the humidity of the environment and by the transfer of heat to the product from the environment. Thus, from a physical viewpoint, many fruits and vegetables may be considered to be reservoirs of moisture covered by membranes through which diffusion occurs.

Transpiration is akin to drying of biological products during the constant rate period, i.e., the drying front is at the surface of the commodity. The falling rate periods of drying can be ignored in the study of transpiration, since fresh fruits and vegetables have a moisture content well above the critical value (the value beyond which the drying front moves into the interior commodity).

There is general agreement among researchers regarding the effects of vapor pressure deficits on transpiration.

At constant absolute humidity, the higher the environmental temperature, the higher will be the rate of transpiration (due to the greater vapor pressure deficit). At constant temperature, the higher the absolute humidity, the lower the transpiration rate. Only two exceptions were noted in the literature. Schaper and Hudson (63) found no relationship between vapor pressure deficit and moisture losses of potatoes. Appleman et al. (3) noted a decrease in transpiration rates of potatoes with increasing storage temperature, and attributed this to the more rapid healing of wounds at the higher temperatures.

The mathematical model that has commonly been used to calculate transpiration rates is the linear model, where the transpiration rate is directly proportional to the vapor pressure difference.

$$\dot{m} = k_{ta} \cdot (p_s - p_\infty) \tag{2-1}$$

where

$\dot{m}$ = Transpiration rate of the commodity on a per unit area basis

k_{ta} = Transpiration coefficient of commodity on a per unit area basis, assumed constant

p_s = Water vapor pressure at the evaporating surface

p_∞ = Ambient water vapor pressure

This model is applied primarily to storage situations where steady-state conditions exist, and the commodity is assumed to be in thermal equilibrium with the environment. The model has also been used with the transpiration rate and coefficient expressed on a per unit mass basis. The ambient water vapor pressure has been calculated from the temperature and humidity of the environment. The water vapor pressure at the evaporating surface has been assumed to be the saturation vapor pressure at the ambient dry bulb temperature. This model has been used by Wells (79), Gentry (23), Dypolt (14), Talbot (73) and a number of other researchers.

Deviations have been observed between the predictions of this model and measured data. For example, if the environment is saturated, and at the same temperature as the commodity, there should, theoretically be no moisture loss. However, moisture losses have been noted even under these conditions. The reasons for these deviations are discussed in later sections on respiration, skin permeability decreases and endothermic effects.

Air Movement

Several investigators have considered the effect of air movement on the transpiration rates of fruits and vegetables, and most have concluded that air movement has a slight but not very significant effect on transpiration rate.

As a commodity loses moisture, the microenvironment surrounding it tends to be saturated due to the localized moisture buildup. Air movement dissipates this saturated air and replaces it with environmental and presumably unsaturated air, thereby tending to increase transpiration. Beyond a certain air velocity, however, as has been noted by Apeland and Baugerod (2), Pieniazek (50, 53), Ryall and Lipton (61), and Villa (76), further increases in rate of air movement have very little, or no further effect. Lentz and Rooke (39) noted that increased air velocity did not result in any appreciable increase in the rate of moisture loss. Gac (21) noted that pears exposed to higher air velocities lost more moisture than those exposed to lower air velocities in storage. Pieniazek (50, 53), reporting the results of earlier research on apples by English workers, stated that air velocities of up to 4 meters per minute tended to increase transpiration rates, while any further increases in air velocity resulted in a decrease in the rate of transpiration. However, in his own research he noted no such decreases, but a leveling off in transpiration rates of apples for velocities greater than 4 meters per minute.

Air velocity may have other effects on transpiration rates of fruits and vegetables. Increasing air velocity and, consequently, Reynolds number affects the heat and mass transfer coefficients. Jason (36), in his studies

on evaporation and diffusion in the drying of fish muscle, stated that the ratio of heat to mass transfer coefficients was practically constant for convective heat and mass transfer except at low values of the Reynolds number (≤ 100) below which the relative effect of natural evaporation became more pronounced. The variation in the values of the heat and mass transfer coefficients is an important effect of air velocity on transpiration and should be considered.

Respiration

Respiration is the most important of all life processes of fruits and vegetables. The chemical equation for respiration may be written as

$$C_6 H_{12} O_6 + 6O_2 \rightarrow 6CO_2 + 6H_2O + 673 \text{ KCal}$$

It has commonly been assumed by many investigators that the only weight loss due to respiration is through the carbon dioxide released. Karmarkar and Joshi (37) and Schippers (64) considered the loss of substrate during the respiration process to be the only respiration loss. However, it has been noticed that respiration causes losses through generation of heat within fruits and vegetables. The role of respiration and its relation with transpiration is a somewhat complex process and has been studied by several researchers.

Butchbaker et al. (5) studied the weight losses of potatoes due to respiration and attempted to determine these losses by measuring the rate of carbon dioxide production of tubers and multiplying this by the ratio 32/22 (the ratio of CO_2 + water vapor and CO_2 molecular weight). The correct value of this ratio is 31/22, but the value was printed as 32/22 in the paper. This, however, was based on the assumption that both the carbon dioxide and the water released during the respiration process escaped to the environment. This assumption is questionable, since it does not take into account the effects of the heat of respiration. Furthermore, Appleman et al. (3), in their studies on potatoes, stated that the water liberated as part of respiration becomes a part of the water content of the tissues and any loss of this water is included in the water of transpiration. They further stated that there is no evidence that respiratory water influences the rate of evaporation of water from the tissues.

Meffert (46), discussing the role of the heat of respiration, stated that it could be dissipated in two ways: through direct heat transfer to the environment and through evaporation of water according to the existing vapor pressure deficit. Other researchers have studied the role of the heat of respiration. Lentz and Rooke (39), in their studies on apples, noted that the fruits lost small amounts

of moisture even when the air in storage was saturated, and initially at the same temperature as the commodities. They attributed this loss to the effect of the heat of respiration which tended to raise the temperature of commodities, create a vapor pressure deficit, and thereby, cause evaporation. Gac (20, 21) stated that the heat of respiration caused the interior of the fruit to be at a slightly higher temperature than the environment, so that losses occurred even in saturated environments. Other researchers, such as Holdsworth (32) and Hylmö et al. (34) emphasized the necessity for considering the effect of heat of respiration on the transpiration process.

Other interesting studies on the effect of transpiration were conducted by Wardlaw and Leonard (78), who concluded that since transpiration tended to have a cooling effect on the commodity, the rate of respiration would be somewhat reduced.

The effects of respiration appear to be (a) chemical effect or the liberation of carbon dioxide and water and (b) physical effects or the release of energy. The carbon dioxide diffuses to the environment, while it appears that the water remains in the tissues. The heat of respiration tends to raise the temperature of the product and either increase transpiration rates, where vapor pressure differences already exist, or cause transpiration in saturated environments. In any experimental work on transpiration

rates, it is very important to account for carbon dioxide losses due to respiration, and to separate these from the transpiration losses.

Size, Shape and Surface Area of the Commodity

The size, shape and surface area of a fruit or vegetable has a significant effect on its transpiration. Large products possess a smaller surface area per unit weight than small ones, of the same variety, and hence tend to lose less moisture on a per unit weight basis.

The effect of size on transpiration has been investigated by several researchers, notably Wells (79), Wardlaw and Leonard (77), Ghani (24), Smock and Neubert (72), and the results confirm the theory. Karmarkar and Joshi (37), in their studies on the effects of fruit size on weight loss, noted that small fruits possessed thinner skins than larger fruits, and that this could be another cause for the noticed trends in transpiration rates.

The shape of a fruit or vegetable could also affect the ratio of surface area to weight. Apeland and Baugerod (2), studying weight losses in carrots, observed that long, thin, and cone-shaped roots lost more weight than thick, cylindrical shaped roots. The longer, thinner roots showed a greater tendency to shrivel at the tips, and this effect was attributed to the greater surface area per unit weight of these roots.

The shape of a fruit or vegetable could also affect, to some extent, the flow of air over its surface, and hence, the heat and mass transfer coefficients. This effect was considered by Villa (76) in his studies on moisture losses from apples, potatoes, and sugarbeets. In the estimation of a heat transfer coefficient, the shape of the product would have to be taken into account.

It is well known that transpiration from a fruit or vegetable varies with surface area. It is, however, inconvenient to express transpiration rates on a per unit basis, because of the difficulties involved in accurate measurement of the surface areas of biological products. Thus, empirical relations may have to be developed between the surface areas and volumes of fruits and vegetables. This was done for apples and potatoes by Villa (76), who studied the usefulness of different surface area prediction methods. Apeland and Baugerod (2) also tried to develop relationships between surface area and volume for carrots. It is clear that there is a necessity for expressing surface areas of commodities on a per unit weight basis rather than on a per unit area basis, and empirical relations would definitely be helpful.

Surface Structure

Surface structure is a very important aspect of studies on transpiration. If vapor pressure deficit represents the driving force for the process, the surface and skin structure

represent the interior resistance, and the air film represents the exterior resistance.

The water in a fruit or vegetable may be lost to the environment through the openings in the skin and stems. Mitchell, Guillou and Parsons (47) demonstrated the open structure of fruit tissues by immersing a pear in water and injecting air into its neck. Bubbles immediately appeared all over the surface, indicating the loose structure of the fruit.

The surface of some fruits or vegetables, while covered almost entirely by an impervious waxy coating, presents many avenues for loss of water: stem scars, lenticels, stomata (if any), wounds, epidermal hairs, cracks in the surface, etc.

Different commodities and different varieties of the same commodity have different epidermal structures, and therefore, offer different resistances to moisture diffusion. This is the major reason for variation of transpiration rate between varieties.

The effect of surface structure on transpiration rates of fruits and vegetables has been the subject of considerable research. Early researchers considered the thickness of the fruit skin to be a sole indicator of the resistance of the fruit to transpiration. However, W. H. Smith (70), Hoffman (31), Pieniazek (52), Smock and Neubert (72) and

others noted no correlation between the cuticular thickness of apples and their transpiration rate.

Many researchers have attempted to find the avenues of water loss from commodities. W. H. Smith (70), Smock and Neubert (72) and Horrocks (33) noted that the number, size and distribution of lenticels and stomata might have an effect on transpiration. Since most fruits either have closed stomata or none at all, their effects have not been investigated. The role of lenticels has been noted by Pieniazek (52), who stated that lenticular transpiration accounts for 8% to 25% of total transpiration of the varieties he studied. There was little change in the amount of lenticular transpiration during storage, and he concluded that there was no closure of lenticels during this period. He also noted that the number and size of lenticels had no correlation with the rate of full transpiration.

Other avenues of water loss have been noted. Ben-Yehoshua (4) stated that the flavedo portion of the peel of the orange fruit was the main site of resistance to gas diffusion. Ryall and Harvey (60) stated that grape berries have a relatively impervious skin and do not give up moisture readily, so moisture is lost largely through the stems.

Hoffman (31), in his studies on snap bean pods, noted that weight loss increased in proportion with the number of epidermal hairs and also with the number of broken or missing

hairs. There was no correlation between weight loss and stoma count, hair length, mesocarp and endocarp cell diameters, depths of endocarp, mesocarp, epidermis and cutin.

The natural waxy coating of the surfaces of most fruits and vegetables has been investigated by several researchers. Horrocks (33) and Christopher and Pieniazek (7) noted that the wax deposit on the surface of fruits has significant effects on moisture loss. Pieniazek (51), found that wiping off the wax from apples causes increased rates of transpiration that will not be suppressed by the new layer of wax that forms on the skin.

The wax structure of the surfaces of grapes has been studied by Possingham et al. (55), Grncarevic and Radler (28), Radler (57) and Chambers and Possingham (6). They found that the waxy coating on the surfaces of fruits is composed of soft wax (long chain alcohols, aldehydes, free acids, esters, hydrocarbons) that can easily be removed by petroleum ether, and hard wax (mainly oleanolic acid) which can be removed by using chloroform. The soft wax fractions are the active components of the grape cuticle and prevent losses by acting as a hydrophobic layer. The hard wax fraction appears to have no effect on evaporation and the wax-free epidermis is not an important vapor barrier.

Golovkin and Kuzmin (26), in their studies on apples, noted that the nonacosane content in the wax of apples may

have an important relationship to the keeping quality. Martin and Stott (43) noted that the drying rate of Sultana grapes is inversely proportional to the amount of cuticle present as determined by extraction with chloroform.

Surface structures of fruits may have other effects. Maxie (45) states that peaches have epidermal hairs that resist dissipation of high moisture areas near the surface, and hence cause the fruits to lose less moisture than smooth skinned fruits.

Thus, the surfaces of fruits and vegetables may be regarded as largely impervious to moisture (generally due to the waxy coating in the case of fruits, and an impervious skin in the case of vegetables) but with several avenues for moisture loss, such as lenticels, stomata, stems, stem scars, cracks, etc. Removal of the waxy coating from the surfaces of some fruits would result in an increased rate of transpiration. In cases of vegetables without a skin, such as lettuce, cabbage and carrots, the surface of the fruit behaves more as a free water surface.

There are several types of treatments that would affect the surface structure, such as waxing (of apples, pears, etc.) and curing (potatoes and onions). Curing of potatoes allows healing of wounds and reduces moisture lossesaccording to Schippers (65), and Martynova and Zhadan (44). Curing of onions dries out the outer scales and neck of the onions

and also reduces moisture losses, as noted by Wright et al. (82), and vandenBerg and Lentz (75).

Attempts have been made by some investigators (notably Gentry (23)), to measure separately the permeabilities of fruit skins by removing them from the fruit. Gac (19) notes that peeling would not be a reliable method, due to damage to the delicate epidermal structure that would be caused by peeling, and any values obtained from such a method would probably not be applicable to the intact fruit.

Development of a mathematical model for describing the surface structure of fruits and vegetables has been attempted by Fockens and Meffert (18). In this model, the fruit surface is largely covered with impervious layers, with small areas that approximate free water surfaces, and others that approximate a water surface covered by a permeable membrane. A similar model has also been used later by Villa (76), and appears to offer a good description for the surface structure of many biological products.

Maturity

Transpiration rates of some fruits and vegetables change with maturity. The changes could be for a variety of reasons and are considered in several papers in the literature. It is commonly believed that immature fruits

transpire at a faster rate than mature ones. Smith (68), working with Victoria plums, observed that immature fruits transpired at a rate about three times higher than fully mature ones. Smock and Neubert (72) and Christopher and Pieniazek (7) observed that immature fruits transpire rapidly, with the rate decreasing until a certain stage of maturity is reached, after which transpiration rate rises again. Overmature fruits had a high transpiration rate, and Iritani et al. (35) found the same was true for tubers. Harvey (30), working with lemons, did not find any changes in rate of moisture loss with maturity. This is, perhaps, to be expected with citrus, which do not ripen with storage, and maintain a relatively steady rate of respiration and transpiration.

Leonard (40) studied the transpiration behavior of several fruits as ripening progressed and noted different trends with different fruits. Tomatoes appear to have a constant transpiration rate regardless of maturity. Tropical fruits such as papaws show an increase in transpiration rate with the appearance of color on the skin. Bananas and mangoes, when green and unripe, possess a steady and low initial rate of transpiration, followed by a rapid rise during the early part of the ripening process. The ripe and overripe fruit show a fairly steady but

usually slowly rising rate until the skin has become completely brown and serious fungal wastage takes place. At that time, a final rapid rise may occur.

It is well established that maturity affects transpiration rates of some commodities. This raises the question of which specific physical or chemical changes caused by maturity are the ones that directly affect transpiration rates. It is generally believed that skin permeability changes occurring with maturity are the changes that influence transpiration most directly. Pieniazek (51) noted that transpiration rates of apple fruits are high early in the season, as the fruit skin is very permeable to water vapor at that time. Permeability decreases until a minimum is reached at picking maturity, and subsequently, the rate of transpiration increases once again.

Wardlaw and Leonard (77) state, in relation to changes during maturation, that careful consideration should be given to the changes in resistance to the passage of gases through the skin tissues. They also recommend a consideration of the relation of the tissues of the flesh to the changing concentrations of the several gases involved. They also found, in the course of their work with papaws, that the fruits showed a decrease in permeability during ripening.

The results of Leonard (40), which indicated an increasing transpiration rate with ripening of bananas and mangoes, appear to be in conflict with decreasing permeability. Leonard attributed his results to a rise in tissue temperature due to increased respiration as the climacteric approached.

Thus, the observed trends in transpiration with maturity appear to be due to skin permeability changes, and changes in rate of respiration. Generally, skin permeabilities of stored fruit tend to decrease with maturity, while respiration rate either varies or remains constant depending on the nature of the product.

Care must be taken, however, in interpreting data regarding permeability changes with maturity, since the same reduction of permeability can be brought about by storage of the product under conditions favoring dehydration. This has been observed by Wilkinson (80) who found permeabilities of apples increased when stored in humid environments, and decreased when stored in dry environments. Thus, skin permeability changes may not be solely due to maturity.

It may be seen from the literature, that the transpiration behavior of different fruits are affected by their stage of maturity. In some cases, the effect is hardly significant, while in others, it is important.

Effects of Moisture Loss on Skin and Tissue Permeability

A common phenomenon encountered in the process of moisture transfer from biological material is the decrease in permeability of such material when moisture depletion occurs. This decrease in permeability supposedly causes an increased resistance to moisture flow through the tissues, and results in a subsequent lower rate of moisture loss.

Wilkinson (80) attempted to determine the effects of relative humidity on the resistance to gaseous diffusion of the tissue of apples. He found that apples tested under humid conditions showed a two or threefold increase in permeability over a six month period. Apples in dry environments decreased steadily in permeability over the same period, and also shriveled gradually. Wilkinson also noticed a slight increase in the volumes of apples stored under wet conditions. Wardlaw and Leonard (78) stated that dessication caused an increase in tissue resistance to the movement of gases. Ben-Yehoshua (4) found that drying of the orange peel caused an increase in resistance to gas diffusion.

The phenomenon of "case hardening," as this drying effect is called, is not unusual, and has been noted in the area of grain drying as well. Since the evaporation

rates from most fruits and vegetables are slow in comparison to that from a free water surface, and the moisture contents of the commodities are very high, this drying effect generally occurs gradually over a long storage period. However, several authors have noted immediate decreases in transpiration coefficients with increased vapor pressure differences.

Pieniazek (51) noted that the transpiration coefficient of apple fruits decreased at high vapor pressure deficits. He attributed this effect to the drying of the outer tissue caused by the increased vapor pressure deficits. Many other researchers have noticed this effect, notably Wardlaw and Leonard (78), W. H. Smith (69), Smock and Neubert (72) and Comin and Junnila (13). Lentz and Rooke (39) noted a decrease in transpiration coefficient at high vapor pressure deficits, and attributed this to drying effects. They stated that this effect could be reversible if drying was not too severe.

Figure 1 shows curves of transpiration rate versus vapor pressure difference. It is a generalized illustration of the deviation between experimental data and the linear model as observed by Lentz and Rooke (39) and Villa (76). The deviation at "zero" vapor pressure difference is due to the effect of respiratory heat generation, which has already been discussed. The deviation from

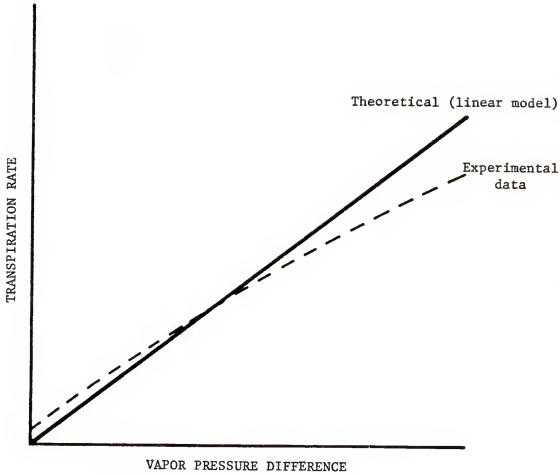

Figure 1. Deviation of experimental curve from linear model.

linearity at the high vapor pressure differences has been attributed to drying effects by the researchers mentioned.

In an effort to account for the nonlinearities observed, mathematical models have been developed assuming the transpiration coefficient to be a function of the vapor pressure difference. Fockens and Meffert (18) have developed a mathematical model for transpiration based on the assumption that, under conditions of low vapor pressure deficit, the cells at the surface of biological products will be round and turgid, while under high vapor pressure deficits, the cells flatten out and cause high diffusional resistances. A similar model was used by Villa (76), with the same assumptions.

The decrease in permeability of fruits and vegetables as affected by moisture losses over a period of time has been well documented. However, the assumption of a variable transpiration coefficient due to permeability decreases at high vapor pressure differences needs verification. This is especially important since none of the researchers making this assumption have given very careful consideration to evaporative cooling effects at the water-air interface. Evaporative cooling is very important in the determination of transpiration rates and is discussed next.

Endothermic Effects of Transpiration

Transpiration is primarily a process of evaporation and diffusion, and endothermic effects are a necessary part of evaporation. However, this is an aspect of transpiration that has been almost entirely ignored in the literature. Most researchers have considered endothermic effects negligible in most biological products, and when calculating vapor pressure deficits have assumed the vapor pressure within the product to be the saturation vapor pressure at the environmental temperature (assuming product and environmental temperature to be equal). However, Gentry (23), Dypolt (14) and Talbot (73), attempting to measure the transpiration rates of various commodities under unsteady state conditions, found that the vapor pressure beneath the skins of the commodities they investigated were somewhat lower than the saturation vapor pressure at the environmental temperature. They did not offer explanations, but noted that the assumptions of past researchers regarding saturation vapor pressures beneath the skins of the commodities may not be entirely valid. One possible explanation is that the evaporative cooling effects of transpiration within and near the surface of the commodity cause a localized lowering of temperature, and hence, reduced local vapor pressures. It may be noted that the effect of high transpiration rates is a

high cooling effect near the evaporating surface. This lowers the vapor pressure deficit near the evaporating surface and tends to work as a regulatory mechanism for the transpiration process. The unsteady state methods of Gentry, Dypolt and Talbot involve the exposure of the commodity to varying and extremely high vapor pressure deficits, thereby resulting in pronounced endothermic effects.

The research by A. J. M. Smith (66, 67) on apples illustrates the manner in which transpiration is affected by its own endothermic effect. He passed apples through a cycle of relative humidities and found that a sudden transfer of an apple from a low to a high relative humidity environment resulted initially in an unusually low transpiration rate which then increased to a steady value. Conversely, a sudden transfer of the apple from a high to a low relative humidity environment (temperatures remaining constant for all tests) resulted immediately in a disproportionately high transpiration rate which subsequently decreased to a steady value. These results were attributed by Smith to the transient effects of setting-up of new vapor gradients at the surface of the product due to the sudden change. A more detailed explanation may be made. Consider a fruit that has been stored at a certain temperature and a low relative humidity. The fruit transpires and,

as a result, must have some cooling effect at or near the epidermis. Since more evaporative cooling would occur in a low humidity environment than in one of higher humidity (at the same temperature), the vapor pressure under the skin of the fruit at this low humidity would be somewhat lower than that at a higher humidity. If this fruit is suddenly transferred to an environment at the same temperature, but a high relative humidity, the vapor pressure deficit will suddenly be changed. The low vapor pressure under the product skin will initially cause an abnormally low vapor pressure deficit in the high humidity environment. This would result in a very low initial transpiration rate, which in turn, would have less cooling effect than before. Hence, the temperature (and therefore, the vapor pressure) beneath the skin would rise until steady-state is achieved. In summary, the transpiration rate in the high humidity environment would initially be very low, and gradually increase until a steady value is reached. Using the same analysis, it may be seen that the transfer of a fruit from a high to a low humidity would result in an initially high transpiration rate which would then decrease to a steady value. The observations of A. J. M. Smith are in agreement with, and bear out the results of the endothermic effects of transpiration.

Holdsworth (32) and Gac (19) emphasized the importance of consideration of the evaporative cooling effects. Holdsworth stated that when considering the heat transfer between the fruit and circulating air, the most important factor is the difference between heat of respiration and heat of evaporation (i.e., the net rate of heat production). Gac studied the balances between exothermic effects of respiration and endothermic effects of evaporation. He established a thermal balance between the heat of respiration and the heat taken up by evaporation. He stated that if the heat necessary to evaporate transpiring water is less than the heat of respiration, the fruit releases heat to the exterior, but if the heat taken up by transpiring water is greater, the net is a loss of heat from the product.

Endothermic effects of transpiration are very important in determining the transpiration rate. Since the amount of evaporative cooling increases with moisture loss and hence, the vapor pressure difference, the rate of transpiration is increasingly retarded by this effect at the high ranges of vapor pressure difference. This may explain the deviations from linearity observed in the previous section. Thus, careful consideration must be given to the magnitude of evaporative cooling in order to accurately calculate the vapor pressure difference.

Dissolved Substances

It is well known that a solution of substances in water results in a lower saturation vapor pressure than that for pure water at the same temperature. For example, a solution of one gram of sugar ($C_6H_{12}O_6$) in one hundred grams of pure water would result in a 0.1% decrease in saturation vapor pressure at the same temperature. Hence, water evaporating from a solution would tend to do so more slowly than from pure water. The water in the cellular membranes of most fruits contains dissolved substances (sugars, gases, etc.). These solutes may or may not have a significant effect on the vapor pressure deficit (and hence, the transpiration rate) depending on the concentration and the nature of the solutes. The role of solutes in the transpiration of fruits and vegetables has received attention from some researchers.

Gac (21) noted that if a fruit or vegetable is placed on a water vapor saturated environment, heat production due to respiration would cause a slight increase in the temperature of the commodity, resulting in a small vapor pressure difference with the environment. However, the presence of dissolved substances would tend to reduce this vapor pressure difference. Thus, if a commodity were to give off moisture when stored under saturated conditions, the effect of respiration would need to more than offset the effect of solutes. Gac, in his studies on pears, calculated the

effect of the heat of respiration, and noted that the resultant increase in the temperature of the fruit (under steady conditions) would be very small: for example, pears placed at 0°C (32°F) would register a temperature rise on the order of 0.015°C. Therefore, if any transpiration were to occur at saturation relative humidities, the effect of solutes would have to be smaller than the effect of the heat of respiration (which, itself was very small in this case). Thus, Gac concluded that if transpiration were to occur under saturated enviornmental conditions, the water in the fruit, and near the surface would have to be at least in the form of a very dilute solution, or even in a very pure state. Gac noted losses in weight in apples and pears stored under saturated conditions, and in some cases, increases in weight of grapes tested under saturated conditions and low air velocities. He attributed this diversity in behavior to differences in heat of respiration and solute concentration between fruit species.

Mann (42) reported that the equilibrium vapor pressure from fruit was 0.98 multiplied by the saturation water vapor pressure at the same temperature. This factor was due to solutes in the water of the fruit. Wells (79) used this factor, and calculated water vapor pressure deficits accordingly. Risch and Watson (58) also used this factor in their research on transpiration rates of tomatoes.

Ghani (24) also noted increases in weight of grapes stored at relative humidities close to saturation. He studied the effects of respiration and transpiration on the concentration of sugars in the solution. He noted that transpiration removes water and leaves solutes behind, thereby concentrating the solutions in the fruit; while respiration breaks down the sugars (producing water and carbon dioxide), thereby tending to dilute the solution.

In summary, the presence of solutes in the water contained in fruits and vegetables appears to have an effect on their transpiration rate. However, the extent of this effect is not clearly known. In fruits and vegetables with a high concentration of soluble solids, the effect may not be negligible. The role of solutes may help in explaining the results of researchers such as Gac (21) and Ghani (24) who have observed a gain in weight in commodities stored under saturated or near saturated environmental conditions. Under these conditions, the relative influences of solutes and the heat of respiration would (barring the existence of hitherto unknown influences) appear to govern the direction and rate of moisture transfer between the commodity and the environment.

Transpiration and respiration have, as noted earlier by Ghani (24), opposing effects on solute concentration. Transpiration, by its concentrating influence, would tend,

indirectly, to regulate itself; while respiration, by its diluting influence (in addition to heating) would tend to cause increased transpiration. The extent of these effects would probably be small, but nevertheless, need some attention. The extent of the effects of solutes on transpiration rates appears to be different for different commodities, and further research is needed to determine their exact nature and magnitude.

High Initial Rates of Water Loss

It has been noticed by many researchers, notably Platenius et al. (54) and W. H. Smith (71) that freshly harvested fruits and vegetables have a very high initial rate of moisture loss. This is usually followed by a fairly rapid decline till a constant transpiration rate is reached. It may be noted that in several experiments, fruits and vegetables were not precooled prior to storage, thereby resulting in higher initial losses; but even under carefully controlled experiments, this high initial rate has been noted.

Robinson et al. (59) observed this phenomenon in several fruits and vegetables. They state that the rate of fall varies with the type of commodity. In potatoes, for example, in which skin-set and the healing of harvesting wounds play a part, it may take 2 weeks for evaporation to reach a steady value. In leafy vegetables, where the drying out of trimming wounds and stomatal closure may be

the reasons for the fall, about 2 hours may suffice. These investigators also state that, in dense leafy vegetables, the evaporation is almost all from the outermost leaves. As these dry out, loss from them dwindles, but they still reduce evaporation as a percentage of the weight of the whole vegetables also dwindles.

Schippers (65) also noted similar high initial transpiration rates in potatoes and attributed it to injuries during harvest and a relatively thin skin.

Prokof'ev, Kats and Rybalova (56) studied transpiration rates of fruits whose stems were immersed in water, and found that these fruits transpired faster than those whose stems were not immersed in water. Furthermore, if sucrose was introduced into the fruit through immersion of the stems into a solution, the transpiration rate was further increased. If phosphate solutions were added along with sucrose, the transpiration rate was even greater. Thus the entry of nutrients into the fruit or vegetable appears to play a role in the transpiration rate of fruits before harvest. At harvest, this nutrient flow is abruptly cut off, and this may be a factor contributing to the decline in transpiration rate immediately after harvest.

Thus, the reasons for the high initial rate of transpiration of fruits and vegetables appear to be the cutoff in nutrient flow after harvest and the injuries encountered

during harvest. Since harvesting is, by itself a process necessitating injury to some part of the fruit or vegetable, little can be done to prevent this high initial rate of loss other than minimization of injury.

Seeds

The effect of fruit seeds on the transpiration rates of fruits has not been studied in the United States, but has received some attention from European researchers.

Côme (8-12) attempted to find correlations between the number of seeds in apples and their moisture loss. He found good correlations between these variables for certain apple varieties, but not for others. For these varieties, correlations existed between rate of moisture loss and either distribution or germination capacity of seeds. He concluded that fruits generally lost less moisture when they contained many seeds that were well distributed and sturdy.

Gorini and Zanetti (27) found negative correlations between weight loss and number of seeds, but observed that, for the same seed-count, larger fruits showed lower losses.

Contrary to the finding of Côme (8-12), Prokof'ev, Kats and Rybalova (56) found that the greater the germinability of the seeds, the greater the rate of transpiration. They also observed that fruits grown under conditions of depressed transpiration showed retarded development of seeds.

The conflicting results presently available do not indicate much of an effect on transpiration and little consideration of this factor can be made at the present time.

Other Effects

Several other effects of transpiration have been observed. These may prove to be of use but they are at least of academic interest. The effect of mold formation or rotting is to increase transpiration greatly. This has been noted by Wardlaw and Leonard (77). Tomkins (74) has noted that the development of rotting is markedly reduced by increasing the rate of evaporation. He states that infection, and hence rotting, can be prevented by storing under conditions which allow sufficient evaporation. Wills and Scott (81) have observed that high water loss from apples causes increased esterification of acids and alcohols in the fruit. Adato and Gazit (1) state that water loss causes water deficit in avocado fruits, and hence accelerates ripening. Infusion of water through the peduncle of these fruits results in replenishment of water, and hence lower water deficit stress and slower ripening.

Wardlaw and Leonard (78) found that transpiration tends to create negative pneumatic pressures in fruits, especially during the later stages of senescence.

Ezell and Wilcox (16, 17) reported that conditions favorable to wilting resulted in a more rapid loss of vitamin C. Vegetables that lose moisture rapidly and wilt appreciably tend to be affected more by humidity and to lose vitamin C more rapidly than those resistant to wilting. Even those that wilt most readily are affected much less by humidity than by temperature. These researchers state in their work on carotene levels that conditions favorable to wilting result in a more rapid loss of carotene, but unfavorable temperatures hasten its destruction more rapidly than does wilting.

Goldovskii (25) studying the undesirable effects of wilting of vegetables in store, concluded that the reasons for these effects were the cessation of the activity of the self-regulating system of cells. Therefore, resistance against microbes was reduced and infection could occur readily.

Mathematical Models Available in the Literature

Linear Model

The simplest relation for transpiration rate is the linear relation given by equation 2-1 in the section on the effect of water vapor pressure deficit.

This equation gives the straight line relationship shown in Figure 2-1. The model does not consider several variables, such as air velocity, respiratory heat generation, skin structure, evaporative cooling effects and maturity. Therefore, not surprisingly, it shows the deviations from experimental data illustrated in Figure 1.

Nonlinear Model

Fockens and Meffert (18) and Villa (76) have attempted to explain the deviations from linearity at high vapor pressure differences in their mathematical models. Their models involve a transpiration coefficient that varies with water vapor pressure difference, based on the hypothesis that the cellular structure in the skin changes with relative humidity. In addition, the models consider the effect of air velocity and structure of the skin. The skin is considered to consist of three parts: the first of which is impervious to water vapor diffusion, the second of which behaves as a porous membrane through which diffusion occurs, and the third part which represents no extra resistance to diffusion, thereby approximating a free water surface.

Experimental results showed that the impervious portion comprises over 99% of the surface area of the product. Since the impervious section does not contribute

to transpiration, it was not included in the diffusion equation. Thus, for purposes of transpiration analysis, only the other zones were considered.

The equation used in this model is as follows.

$$\dot{m} = \left(\frac{\xi_1 \cdot \beta}{R_d \cdot T} + \xi_2 \cdot \frac{1}{\frac{1}{\beta} + \mu \cdot \frac{s}{\delta}} \right) \cdot (p_s - p_\infty) \qquad (2\text{-}2)$$

where

$\dot{m}$ = Transpiration rate on a per unit area basis

ξ_1 = Fraction of surface behaving as a free water surface

ξ_2 = Fraction of surface behaving as a porous membrane

R_d = Universal gas constant

T = Ambient temperature in absolute units

β = Convective mass transfer coefficient

δ = Diffusion coefficient of water vapor in air

s = Skin thickness

μ = Resistance factor

$$= \frac{\text{Vapor flow through air layer of thickness } s}{\text{Vapor flow through porous membrane of thickness } s}$$

p_s = Water vapor pressure at evaporating surface

p_∞ = Ambient water vapor pressure

The experimental work consisted of determining ξ_1, ξ_2 and $\mu \cdot s$. These were determined by measuring transpiration rates at three different air velocities--thus yielding three different values for β--and calculating the three parameters from the resulting equations. Villa (76) used a computer routine called GAUSHAUS in the estimation of the three parameters, details of which are unavailable.

It was found that the area of the free water surface zones were negligible for purposes of calculation. Fockens and Meffert (18) assumed an isothermal diffusion process, thereby neglecting evaporative cooling. Villa (76) considered evaporative cooling effects, but only insofar as they applied to evaporation from a free water surface. No special consideration was made for evaporative cooling taking place near the porous membranes. Careful consideration of this effect is necessary for correct calculation of water vapor pressure differences, and could help explain the nonlinear behavior of the transpiration curve which has hitherto been attributed to drying effects. Neither of the researchers considered respiratory heat generation and the related carbon dioxide losses, maturity, or the effect of solutes.

Summary

The major factors to be taken into consideration in a study of transpiration of fruits and vegetables are as follows:

1. Water vapor pressure difference.
2. Air movement.
3. Respiratory heat generation and carbon dioxide losses.
4. Size, shape and surface area.
5. Surface structure.
6. Maturity.
7. Permeability changes due to moisture loss.
8. Evaporative cooling effects.
9. Effect of solutes.
10. Time elapsed after harvest.

The mathematical analyses and experimental work have emphasized importance of each of these factors. Some researchers have considered more factors than others in the development of a mathematical model. However, there is no mathematical model currently available that completely examines all these effects. Such a model would be desirable in order to provide useful data for determination of transpiration rates from fruits and vegetables. The development of such a model is attempted in this research.

CHAPTER III

OBJECTIVES

The objectives of this research are:

1. Development of a mathematical model for prediction of transpiration rates from spherical fruits with skins.

2. Experimental determination of the parameters affecting moisture losses in FTE-12 tomatoes.

3. Use of the mathematical model and the experimentally determined parameters for theoretical prediction of moisture losses from FTE-12 tomatoes under different environmental conditions.

4. Experimental determination of transpiration rates of FTE-12 tomatoes under different environmental conditions.

5. Testing of the accuracy of the mathematical model by comparison of predicted and experimentally determined transpiration rates.

6. Development of an empirical relationship for prediction of surface areas of FTE-12 tomatoes.

7. Calculation of transpiration coefficients of FTE-12 tomatoes on a per unit area as well as a per unit mass basis.

CHAPTER IV

THEORETICAL ANALYSIS

From the review of literature, it is clear that an accurate determination of transpiration coefficients must be based on accurate determination of the vapor pressure gradients involved. The apparent variability of the transpiration coefficient with vapor pressure deficit appears to be an example of inaccurate determination of the gradient for moisture transfer. The value of the vapor pressure at the evaporating surface must be calculated at the temperature of that surface, and not at the environmental dry bulb temperature. The temperature of the evaporating surface is extremely difficult to determine accurately by experiment due to the very small surface area from which most of the transpiration occurs. The surface temperature depends on the relative rates of heat flow due to evaporation and respiratory heat generation. Thus, it is necessary to be able to calculate the temperature at the evaporating surface by theoretical considerations. In addition, all other factors discussed in the literature review must be accounted for in the development of the mathematical model. A discussion on the treatment of these factors is presented next.

Treatment of Factors Affecting Transpiration

Water Vapor Pressure Difference

The water vapor pressure at the evaporating surface will be determined by theoretical considerations. The water vapor pressure of the environment is calculated, given the ambient temperature and relative humidity.

Air Movement

The effects of air movement are generally small, since the resistance of the boundary layer to moisture transfer is generally low in comparison to the skin resistance.

The convective mass transfer coefficient is estimated by using the following empirical formula for air flow over a sphere as presented by Edwards et al. (15) and Geankoplis (22).

$$Sh = 2 + 0.37 \cdot Re^{0.6} \cdot Sc^{0.33} \qquad (4\text{-}1)$$

where

Sh = Sherwood number = $h_d \cdot D/\cancel{k}\,\delta$

Re = Reynolds number = $V \cdot D/\nu$

Sc = Schmidt number = ν/δ_a = 0.61 for dilute air-water vapor mixtures

h_d = Convective mass transfer coefficient

D = Diameter of sphere

~~k = Thermal conductivity of air~~

V = Air velocity

ν = Kinematic viscosity of air

δ_a = Molecular diffusivity of water vapor in air

Respiration

The rate of respiratory heat generation can be estimated in proportion to the amount of carbon dioxide evolution by the following equation.

$$C_6 H_{12} O_6 + 6O_2 \rightarrow 6CO_2 + 6H_2O = 673 \text{ Kcal} \qquad (4\text{-}2)$$

The actual process of respiration is much more complex than that described by the equation 4-2, and any estimation of heat generation from it is approximate, at best. However, this appears to be the only available method for estimating its magnitude. The respiration rate is a function of temperature, but since temperature gradient in stored commodities is not large enough to cause a significant difference in respiration rate, it will be considered as constant for a given temperature of storage. Data on respiration rates of various commodities at different temperature have been presented by Lutz and Hardenburg (41) and by Ryall and Lipton (61).

Size, Shape and Surface Area

The fruits are considered spherical in shape and hence, their dimensions are easily characterized by their diameters. In addition, an empirical formula will be developed to estimate the surface area from the mass of the commodity.

Surface Structure

This factor will be accounted for in the theoretical analysis.

Maturity

Transpiration rates of some fruits are known to vary with maturity, but the exact trends cannot be quantified because there is no objective criterion for the measurement of maturity. This, by itself, is an area that needs consideration. If an objective index could be developed for maturity, an empirical relation might then be developed between the maturity index and the transpiration coefficient. This could be the next phase of transpiration research, but it is outside the scope of the present research. Therefore, the approach here will be the development of a mathematical model without regard to maturity. This assumption may have greater applicability in the case of tomatoes, since it has been noted in the literature by Leonard (40) that tomato transpiration rates do not vary with maturity.

Permeability Changes Due to Moisture Loss

This factor will not be considered since the magnitude of its effect is expected to be very small over typical storage periods.

Endothermic Effects of Transpiration

This will be theoretically accounted for in the heat balance required to determine the temperature of the evaporating surface.

Effect of Solutes

This factor is very significant in some commodities and less so in others. For tomatoes, this factor will be accounted for by using the relationship of Risch and Watson (58) where the vapor pressure of the evaporating surface is considered to be 98% of the saturation vapor pressure at the surface temperature.

Analysis of Moisture Diffusion Through the Skin of a Spherical Fruit

The choice of spherical fruits with a skin is partially dictated by convenience, since the analysis involved is simplified. The analysis for commodities with irregular shapes is considerably more complex, and will not be attempted here. An approximately spherical shape and the presence of a skin is a reasonable model for a number of other fruits, such as apples, peaches, plums and cherries.

Assumptions

1. Steady state conditions exist.
2. The mass average temperature of the fruit is very close in value to that of the environment.
3. The fruit is considered to be a sphere filled with liquid water and covered by a skin of uniform thickness.
4. The fruit skin is largely impervious to water vapor, but contains pores distributed over its surface, through which water vapor is transported.

5. The pores are of uniform cross-sectional area throughout their length.

6. The evaporating surface lies immediately below the skin layer of the fruit.

7. Moisture loss occurs by evaporation of water and diffusion of the vapor through the pores.

8. The properties of the gas in the pores are the as those of air at the ambient conditions.

9. The density of water vapor in the pores is much lower than the density of air in the pores. This is a valid assumption and ensures negligible convective velocity in the pores.

10. The water vapor diffuses through stagnant air in the pores. This assumption is not strictly true, since the commodity continuously exchanges oxygen, carbon dioxide, and other gases with the atmosphere. The assumption is made for simplification of the problem.

11. The diffusion coefficient of water vapor through the pores is equal to that of water vapor through air at the same temperature and atmospheric pressure.

12. End effects in diffusive flow are neglected.

13. Heat flow within the pore is negligible in all directions except the direction along the length of the pore.

14. Thermal diffusion effects are negligible.

15. The temperature at the skin-boundary layer interface is equal to the ambient temperature.

16. The latent heat removed by vaporization of water is supplied both by conduction from within the fruit as well as conduction through the pores.

17. The fruit has a uniform rate of respiratory heat generation per unit volume throughout its interior. This assumption, too, is not strictly true since the respiratory activity in tomatoes is mostly concentrated in the locular area and around the seeds. The assumption is necessary for simplification of the problem.

18. The termperature gradients within the fruit are not large enough to cause any significant non-uniformity in respiratory heat generation.

19. The rate of heat transfer in the radial direction in the sphere is much greater than the rate of heat transfer in all other directions.

20. The driving force for moisture transfer is considered to be the water vapor pressure gradient. The generalized concept for the mass transfer driving force is the chemical potential, but it will not be used. Jusfification for this assumption is provided in Appendix A.

21. Moisture transfer through the boundary layer is isothermal.

22. The rate of moisture transfer per unit pore area is constant for all pores of a single fruit.

Derivation of Governing Equations

The fruit, as illustrated in Figure 2, is considered to possess N pores of cross-sectional areas A_1, A_2, . . . , A_1, . . . A_N.

Then, the total pore area is

$$A_p = \sum_{i=1}^{N} (A_i) \tag{4-3}$$

where

A_p = Total pore area

A_i = Cross-sectional area of pore i

It is convenient, at this point to define a parameter of the fruit that represents the fraction of the area of the surface that is covered by pores. Thus,

$$\phi = A_p/A \tag{4-4}$$

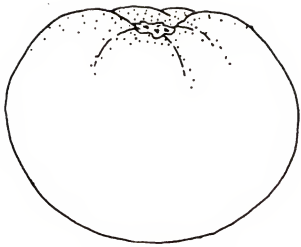

Figure 2. Diagram of idealized fruit, with pores.

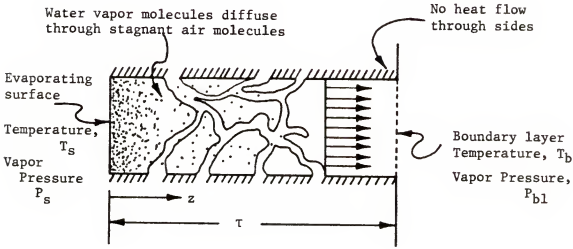

Figure 3. Longitudinal section through an idealized pore.

where

ϕ = Fraction of total surface area that is covered by pores

A = Total surface area of the fruit

The total moisture loss of the fruit per unit time is

$$\dot{M} = \sum_{i=1}^{N} (A_i \cdot \dot{m}_p) \tag{4-5}$$

where

$\dot{M}$ = Total moisture loss per unit time

$\dot{m}_p$ = Rate of water vapor transfer per unit pore area

The transpiration rate is, therefore,

$$\dot{m} = \dot{M}/A = \dot{m}_p \cdot A_p/A = \dot{m}_p \cdot \phi \tag{4-6}$$

where

$\dot{m}$ = Transpiration rate

Thus, we proceed by analyzing the transpiration process for a single pore, and then summing the results over the entire pore area.

In analyzing the diffusion process, we consider a single idealized pore, as illustrated in Figure 3. In order to know the vapor pressure at the evaporating surface, it is necessary to know the temperature at that surface. Thus, we first consider the energy equation for the pore.

By the assumptions made earlier, we have "plug flow," with water vapor diffusing through stagnant air. This

problem is similar to that of a tubular reactor where a gas diffuses through stationary particles. The equation governing this is

$$k_s \frac{d^2T}{dz^2} - \rho \cdot C_p \cdot v_z \frac{dT}{dz} = 0 \tag{4-7}$$

where

z = Distance along pore from evaporating surface

k_s = Thermal conductivity of the pore

T = Temperature at distance z along the pore

ρ = Density of water vapor

v_z = Average velocity of diffusing water vapor

C_p = Specific heat of water vapor

The quantities ρ and v_z both vary with z, but

$$\rho \cdot v_z = \dot{m}_p = \text{constant} \tag{4-8}$$

Thus, equation 4-7 may be rewritten as

$$k_s \frac{d^2T}{dz^2} - C_p \cdot \dot{m}_p \frac{dT}{dz} = 0 \tag{4-9}$$

This is the energy equation that must be solved. The boundary condition at the interface between the ambient air and the outside surface of the skin is

$$T(\tau) = T_b$$

where

τ = Thickness of skin

T_b = Ambient temperature

The boundary condition at the evaporating surface is determined by analyzing the heat flow within the commodity, and is presented in Appendix B. The condition at this surface is

$$k_s \frac{dT(0)}{dz} = L \cdot \dot{m}_p - \frac{u \cdot R}{3} \tag{4-11}$$

where

L = Latent heat of vaporization of water

u = Rate of respiratory heat generation per unit volume

R = Radius of fruit

It may be noted that there has been no necessity to use the assumption of spherical shape of the commodity until the determination of the boundary condition at the evaporating surface. The solution of the differential equation 4-9, and the application of the boundary conditions 4-10 and 4-11, yields the following result.

$$T(z) = T_b + \frac{\left(L \cdot \dot{m}_p - \frac{u \cdot R}{3}\right)}{c_p \cdot \dot{m}_p} \cdot \left[\exp\left(\frac{c_p \dot{m}_p}{k_s} \cdot z\right) - \exp\left(\frac{C_p \dot{m}_p}{k_s} \cdot \tau\right)\right] \tag{4-12}$$

The temperature of the evaporating surface is obtained by setting z equal to zero in equation 4-12. Thus,

$$T_s = T_b - \frac{\left(L \cdot \dot{m}_p - \frac{u \cdot R}{3}\right)}{C_p \cdot \dot{m}_p} \cdot \left[\exp\left(\frac{C_p \cdot \dot{m}_p}{k_s} \cdot \tau\right) - 1\right] \tag{4-13}$$

where

T_s = Temperature of the evaporating surface

This relation yields the desired surface temperature to be used in the mass flow equation.

The mass transfer problem which is considered next is divided into two parts:

1. Diffusive flow through the pore.
2. Convective flow through the boundary layer.

The equation for mass flow through the pore is the simple one-dimensional diffusion equation.

$$\frac{d^2p}{dz^2} = 0 \tag{4-14}$$

where

p = water vapor pressure at a point z along the pore

The boundary conditions are

$$p(0) = p_s \tag{4-15}$$

$$p(\tau) = p_{b1} \tag{4-16}$$

where

$p_s = p_s(T_s)$ = Saturation water vapor pressure at the evaporating surface

p_{b1} = Vapor pressure at the inner end of the boundary layer

The solution of equation 4-14, with boundary conditions 4-15 and 4-16 is

$$p(z) = -\frac{(p_s - p_{b1})}{\tau} \cdot z + p_s \tag{4-17}$$

The mass flux of water vapor is given by

$$\dot{m}_p = -\delta \cdot \frac{dp}{dz} \tag{4-18}$$

where

δ = Diffusion coefficient of water vapor in air

Differentiation of equation 4-17 with respect to z and substitution in equation 4-18 yields

$$\dot{m}_p = \frac{\delta}{\tau} \cdot \left(p_s - p_{b1}\right) \tag{4-19}$$

Thus, for a pore of cross-sectional area A_i,

$$\dot{M}_i = A_i \frac{\delta}{\tau} \cdot \left(p_s - p_{b1}\right) \tag{4-20}$$

Summation of this result over all the pores of the fruit yields

$$\dot{M} = \sum_{i=1}^{N} A_i \cdot \frac{\delta}{\tau} \left(p_s - p_{b1}\right) \tag{4-21}$$

From equations 4-3 and 4-4,

$$\sum_{i=1}^{N} A_i = A_p = A \cdot \phi$$

Substituting these into equation 4-21 yields

$$\dot{M} = A \cdot \frac{\delta \cdot \phi}{\tau} \left(p_s - p_{bl}\right) \tag{4-22}$$

In equation 4-22, the quantity $\delta\phi/\tau$ is the transpiration coefficient of the fruit on a per unit area basis.

The next consideration is transport in the boundary layer, where convective transport, and possibly flow separation occur. The convective mass transfer coefficient can be determined from the relation for the Sherwood number, presented in equation 4-1, where

$$Sh = 2 + 0.37 \cdot Re^{0.6} \cdot Sc^{0.33}$$

The rate of mass transfer through the boundary layer can be expressed as

$$\dot{M} = h_d \cdot A\left(p_{bl} - p_\infty\right) \tag{4-23}$$

where

p_∞ = Ambient water vapor pressure

h_d = Convective mass transfer coefficient

Combining equations 4-23 and 4-22, and eliminating the unknown term p_{bl},

$$\dot{M} = \frac{A}{\frac{\tau}{\delta\phi} + \frac{1}{h_d}} \left(p_s - p_\infty\right) \tag{4-24}$$

Hence, the transpiration rate of the fruit is

$$\dot{m} = \frac{(p_s - p_\infty)}{\frac{\tau}{\delta\phi} + \frac{1}{h_d}} \tag{4-25}$$

Equation 4-25 is the equation for mass flow and, together with equation 4-13, comprises the mathematical model to be used for determination of transpiration rates.

Discussion of Derived Relations

The relations derived for calculation of transpiration rate are

$$\dot{m} = \frac{(p_s - p_\infty)}{\frac{\tau}{\delta\phi} + \frac{1}{h_d}} \tag{4-25}$$

$$T_s = T_b - \frac{\left(L \cdot \dot{m}_p - \frac{u \cdot R}{3}\right)}{C_p \cdot \dot{m}_p} \left(\exp\left(\frac{C_p \cdot \dot{m}_p}{k_s} \cdot \tau\right) - 1\right) \tag{4-13}$$

It must be noted that p_s is the saturation water vapor pressure at the temperature T_s of the evaporating surface.

$$p_s = p_s(T_s)$$

Once T_s is known, p_s can be calculated from standard psychrometric formulae, or estimated from psychrometric charts.

Assuming for the moment that the skin resistance term $\tau/\delta\phi$ and the boundary layer resistance term $1/h_d$ in equation 4-25 are known, we can calculate the transpiration rate for any value p_∞, provided p_s is known. However, p_s is a function

of T_s. Thus, we must calculate T_s from equation 4-13. In order to perform this calculation, however, the transpiration rate must be known. Thus, the solution must be obtained iteratively, using the value of saturation water vapor pressure at the environmental temperature T_b as a first approximation of p_s. This is generally a good initial approximation for p_s, since the temperature gradients within the pore are generally fairly small. The transpiration rate thus estimated from equation 4-25 can be substituted in equation 4-13, to determine a new value for T_s. Next, the saturation vapor pressure at the new value of T_s is calculated, and the procedure repeated until convergence is obtained.

It may be observed from equation 4-13, that under high vapor pressure differences, the temperature of the evaporating surface is lower than the ambient temperature. An interesting result arises for storage under saturated conditions. In this case, the first estimate of transpiration rate is zero. Then, the difference between the surface and ambient temperatures from equation 4-13 is

$$T_s - T_b = \lim_{\dot{m}_p \to 0} \frac{\frac{u \cdot R}{3} - L \cdot \dot{m}_p}{C_p \cdot \dot{m}_p} \left[\exp \left(\frac{C_p \cdot \dot{m}_p}{k_s} \cdot \tau \right) - 1 \right]$$

or

$$T_s - T_b = \lim_{\dot{m}_p \to 0} \left[\frac{u \cdot R}{3C_p \cdot \dot{m}_p} \left[\exp \left(\frac{C_p \cdot \dot{m}_p}{k_s} \cdot \tau \right) - 1 \right] \right]$$

This is clearly an indeterminate form. Thus, using L'Hôpital's rule

$$T_s - T_b = \frac{u \cdot R}{3k_s} \cdot \tau \tag{4-26}$$

Since all the parameters on the right side of the equation are positive quantities, it may be concluded that the temperature T_s of the evaporating surface rises above the ambient temperature T_b. This would result in a slight increase in P_s and hence, a finite moisture loss would occur even under saturated environmental conditions. This result is consistent with the experimental observations presented in the literature review.

Determination of Parameters

The equations 4-25 and 4-13 contain parameters of the fruit that need to be determined for practical use of the model. The equations are presented here, along with equation 4-6.

$$m = \frac{(p_s - p_\infty)}{\frac{\tau}{\delta\phi} + \frac{1}{h_d}} \tag{4-25}$$

$$T_s = T_b - \frac{\left(L \cdot \dot{m}_p - \frac{u \cdot R}{3}\right)}{C_p \cdot \dot{m}_p} \left(\exp\left(\frac{C_p \cdot \dot{m}_p}{k_s} \cdot \tau\right) - 1 \right) \tag{4-13}$$

$$\dot{m} = \dot{m}_p \cdot \phi \tag{4-6}$$

In equation 4-25, all quantities except ϕ and p_s are either known from available data and empirical formulae, or else, can be determined by direct measurement. If the environmental conditions of the experiment are controlled so that the vapor pressure difference is small, the surface temperature T_s does not differ significantly from the ambient temperature, T_b. Thus, P_s can be assumed to be the saturation vapor pressure at the ambient temperature multiplied by a factor of 0.98 to account for the presence of soluble solids. The only unknown then remaining in equation 4-25 is ϕ, which is then, easily estimated. It is necessary to correct this value of ϕ to account for the small error in the assumption regarding the surface temperature.

After the value of ϕ is determined in the aforementioned manner, it is necessary to use equation 4-13 in order to estimate the transpiration rate at higher water vapor pressure differences. In equation 4-13, however, all quantities except T_s and k_s can either be estimated or measured directly. Thus, an estimate for k_s is necessary. Direct experimental determination of k_s is extremely difficult since it is a highly localized property, to be determined only in the porous region of the skin. The thermal conductivity of the porous regions differs considerably from the conductivity of the impervious parts, since a large portion of the pore volume is occupied by air. An estimate of k_s must

be obtained from experimental measurement of the deviations from the linear transpiration model, in the manner described below.

The deviation of experimentally measured transpiration rates from the linear model has been hypothesized as being due to reductions in surface temperature at high water vapor pressure differences. If transpiration rates are measured at a vapor pressure difference at which the surface temperature drop is significant, the deviation from the linear model prediction at that vapor pressure difference could be calculated. The deviation would be due to a certain drop in p_s, which could be calculated by using equation 4-25. With this new estimate of p_s, the surface temperature T_s corresponding to p_s could be determined. Using this value of T_s, equation 4-13 could be used for estimation of k_s. The value of T_s used, however, is only a first estimate in the iterative procedure involving equations 4-25 and 4-13. The value would have to be corrected by using the iterative procedure and the estimate for k_s. When the appropriate corrections for T_s are made, corrections in the value of k_s could be made for better accuracy.

When the parameters ϕ and k_s are determined, the iterative procedure involving equations 4-25 and 4-13 could be used for prediction of transpiration rates at other vapor pressure differences. The predictions could

then be compared to experimental data to test the accuracy of the model.

All the other parameters in equations 4-25 and 4-13 are listed next, along with the methods of measurement or calculation of each.

Transpiration rate ($\dot{m}$). According to equation 4-6, the transpiration rate is

$$\dot{m} = \frac{\dot{M}}{A} \tag{4-6}$$

The value of $\dot{M}$ is determined by measurement of the weight loss of the commodity over a specified storage period, and subtracting out the estimated mass of carbon dioxide released due to respiration during that period. The value of A can be determined by peeling the skin of the tomato and measuring their surface areas with a digitizer. An empirical relationship between surface area and the mass of the fruit (which is directly proportional to the volume) could be developed by statistical regression so that the surface area could be estimated directly from the mass of the commodity.

Skin thickness (τ). The skin thickness is determined by direct measurement with a microscope.

Diffusion coefficient of water vapor in air (δ). The molecular diffusivity of water vapor in air is a function of temperature and pressure. The relationship is presented by the National Research Council (49) as

$$\delta_a = \delta_0(\theta_i/\theta_0)^m \cdot (P_0/P_i) \tag{4-27}$$

where

δ_0 = Molecular diffusivity at the reference temperature and pressure = 0.22 cm^2/sec

θ_0 = Reference temperature = 273.15°K

P_0 = Reference pressure = 1 atmosphere

θ_i = Ambient temperature

P_i = Total pressure

m = 1.75

Since the vapor pressure is being used as the driving force in this analysis, the value of δ must be determined from δ_a by using the appropriate correction factors.

Convective mass transfer coefficient (h_d). The parameter depends on the Reynolds number, and hence, a measurement of air velocity is necessary. The value of h_d is then estimated by using equation 4-1 for the Sherwood number.

Water vapor pressure at the evaporating surface (p_s). This is a function of the surface temperature T_s, and may be determined from psychrometric charts or formulae if T_s is known. At low vapor pressure differences, p_s may be approximated as the saturation water vapor pressure at the ambient temperature T_b, multiplied by a correction factor to account for the presence of solutes.

Keenan et al. (38) have developed a formula for calculation of saturation water vapor pressure from the temperature. This formula is accurate in the temperature range from 0°C to 374°C and is listed as follows:

$$\log_e (p_{ws}/217.99) = (0.01/\theta)(374.136 - t) \times \sum_{i=1}^{8} F_i(0.65 - 0.01t)^{i-1} \qquad (4\text{-}28)$$

where

p_{ws} = Saturation water vapor pressure in atmospheres

θ = Absolute temperature, degrees Kelvin

$t = \theta - 273.15$ = Temperature, degrees Celsius

$F_1 = -741.9242$

$F_2 = -29.72100$

$F_3 = -11.55286$

$F_4 = -0.8685635$

$F_5 = 0.1094098$

$F_6 = 0.439993$

$F_7 = 0.2520658$

$F_8 = 0.052188684$

The value for p_{ws} thus obtained may be converted into the appropriate units required for calculation. However, Raoult's Law must also be considered in the calculation of p_s, due to the presence of soluble solids. Thus, the relationship used by Risch and Watson (58) can be used to determine p_s. This relation is

$$p_s = 0.98 p_{ss} \qquad (4\text{-}29)$$

where

p_{ss} = saturation vapor pressure of pure water at temperature T_s

Ambient water vapor pressure (p_∞). This is determined from psychometric charts for given environmental dry bulb temperatures and relative humidities.

Temperature of evaporating surface (T_s). This is calculated from equation 4-13, using the described iterative procedure in conjunction with equation 4-25.

Temperature of environment (T_b). The value of T_b is determinable by direct measurement.

Latent heat of vaporization of water (L). The value of latent heat is available in handbooks.

Specific heat of water vapor (C_p). The value of C_p for the appropriate temperature and pressure conditions is available in handbooks.

Rate of respiratory heat generation (u). The available data on respiratory heat generation presented by Lutz and Hardenburg (41) and Ryall and Lipton (61), cover a wide range of values. Thus, any values obtained from these data would be approximations. Furthermore, the respiration rate of tomatoes varies considerably over the duration of typical storage periods, reaching a maximum at the climacteric. Thus, values for u must be determined by experimental measurement of the rate of carbon dioxide evolution. Then, using the chemical equation 4-2, the rate of heat generation may be determined in proportion to the rate of carbon dioxide evolution.

Radius of fruit (R). Tomatoes are not precisely spherical. Thus, measurements of the diameter must be made along different sets of axes, and averaged to determine the value of R.

Summary

The mathematical model to be tested is given by equations 4-25 and 4-13. The parameters ϕ and k_s in these equations are to be determined experimentally, in the manner described. A number of other measurements are necessary for determination of the other parameters, and the methods to be used are described. Thus, an experimental procedure may be established for the determination of the necessary parameters, and for verification of the model.

CHAPTER V

EXPERIMENTAL SETUP AND PROCEDURE

The experimental determination of several parameters have been established from the theoretical analysis, as necessary for verification of the mathematical model for transpiration. The parameters of the fruit skin that are to be calculated from the data are the following.

1. Fraction of surface area covered by pores (ϕ).
2. Thermal conductivity of pores (k_s).

In order to determine ϕ and k_s, several other parameters must be determined, either directly or indirectly, by experiment. These are listed below.

1. Rate of moisture loss from fruit ($\dot{M}$).
2. Surface area (A).
3. Skin thickness (τ).
4. Air velocity (V).
5. Ambient temperature (T_b).
6. Ambient water vapor pressure (p_∞).
7. Rate of respiratory heat generation (u).
8. Radius of fruit (R).

Critical Parameters

An error analysis performed on equations 4-25 and 4-13 indicated the relative importance of measurement precision for each parameter. The details of the analysis are presented in Appendix C. It was found that the rate of moisture loss ($\dot{M}$) and the skin thickness (τ) were the parameters that were most critical for the prediction accuracy using the mathematical model. The choice of instrumentation in the measurement of $\dot{M}$ and τ were dictated by these considerations.

Experimental Setup

Environmental Control

A schematic diagram of the experimental setup used for measurement of transpiration rates is presented in Figure 4. The setup consisted of four test chambers (shown in Figure 5) placed within a large, insulated walk-in type chamber. The temperature within the walk-in chamber--shown in Figure 6--was controlled at the desired test levels by an Aminco Aire refrigeration/heating unit. The relative humidity within the walk-in chamber was controlled at a suitably low value to minimize the possibility of condensation. The environments within each of the test chambers were carefully controlled at different levels of relative humidity in the

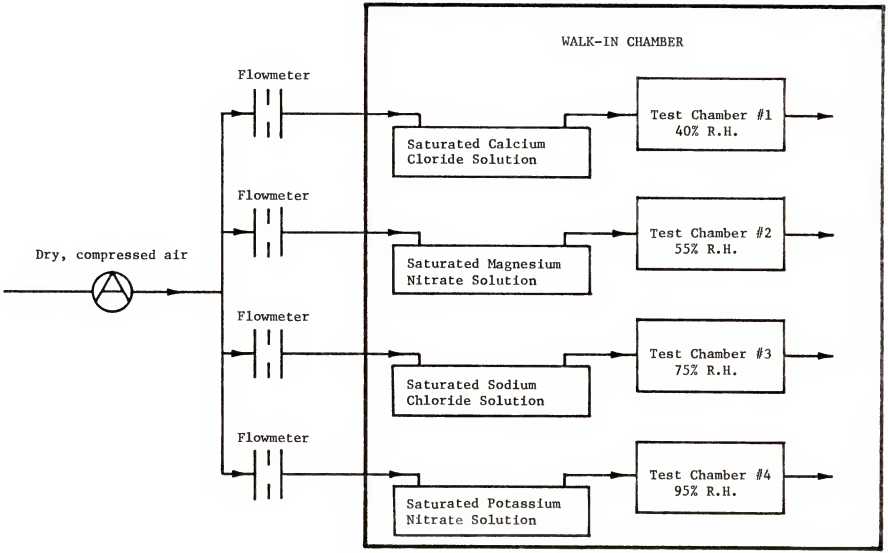

Figure 4. Schematic diagram of experimental setup for environmental control.

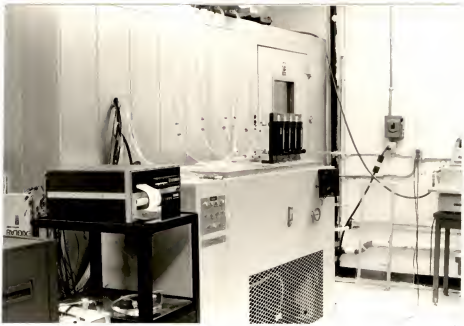

Figure 5. Walk-in chamber with Aminco Aire unit for environmental control. Note panel with four flowmeters for individual air flow control for each test chamber.

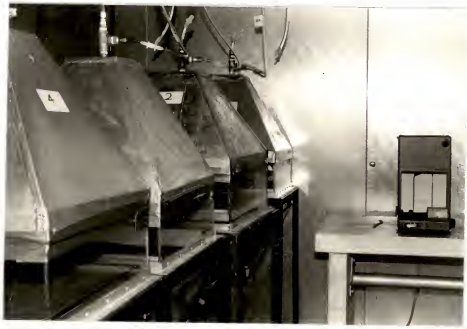

Figure 6. Test chambers located within walk-in chamber. Note balance on the right.

following manner. Dry, compressed air from an outside source was bubbled through four large polyethylene bottles filled with a given saturated salt solution at the test temperature, and then passed through the corresponding test chamber. The temperature of the salt solutions was controlled at test levels by placing them within the walk-in chamber. By using different salt solutions for each test chamber, a wide range of relative humidities was obtained. The method of bubbling and the presence of large quantities of saturated salt solution resulted in high convective heat and mass transfer coefficients between the air and the liquid, and ensured that the air entering the test chambers was at the temperature and relative humidity required for the experiment. The salts used were potassium nitrate (KNO_3), sodium chloride ($NaCl$), magnesium nitrate ($Mg(NO_3)_2 \cdot 6H_2O$) and calcium chloride ($CaCl_2$). Hall (29) presents data on the relative humidities in equilibrium with saturated solutions of each of these salts. Interpolated values from the data for those temperatures used in this research are shown in Table 1.

The rate of air flow through each salt solution and the corresponding test chamber was controlled and measured by a Matheson FM-1100 rotameter type flowmeter with a tapered control valve. Four such flowmeters were used--one for each test chamber--to ensure independent air flow control. The air flow rates were the same for each test chamber; and

TABLE 1

RELATIVE HUMIDITIES IN EQUILIBRIUM WITH SATURATED SALT SOLUTIONS AT TEST TEMPERATURES

	Temperature		
	10°C	12.8°C	16°C
	Relative Humidity (%)		
Calcium Chloride $CaCl_2$	40.0	38.8	37.5
Magnesium Nitrate $Mg(NO_3)_2 \cdot 6H_2O$	57.8	57.0	56.2
Sodium Chloride NaCl	75.2	75.3	75.4
Potassium Nitrate KNO_3	95.5	94.9	94.2

were maintained at the maximum level possible without causing excessive expansion of the bottles or breakage of the seals.

Measurement Systems

The temperatures within the test chambers were continuously monitored by nine thermocouples placed within each of them. The thermocouple wires were connected to an Esterline Angus PD-2064 data acquisition system which enabled direct measurement and recording of temperature to a precision of within ±0.3°C.

Sampling ports built into the inlets and outlets of the test chambers enabled measurement of dew points and respiratory carbon dioxide evolution rates. A schematic diagram of this measurement system is presented in Figure 7. The tubes from the inlet and outlet ports of each test chamber were connected to two separate manifolds of a sampling unit.

The sampling unit, shown in Figure 8, consisted of two manifolds with two-way normally closed solenoid valves mounted on each arm. One of the manifolds was connected to the test chamber inlets, while the other was connected to the outlets. A cam operated timer was connected to each of the solenoid valves, with the circuits designed and cams adjusted so that air from the inlet and outlet of only one test chamber could be simultaneously and independently sampled. The total cycle time of the timer was one hour. Thus,

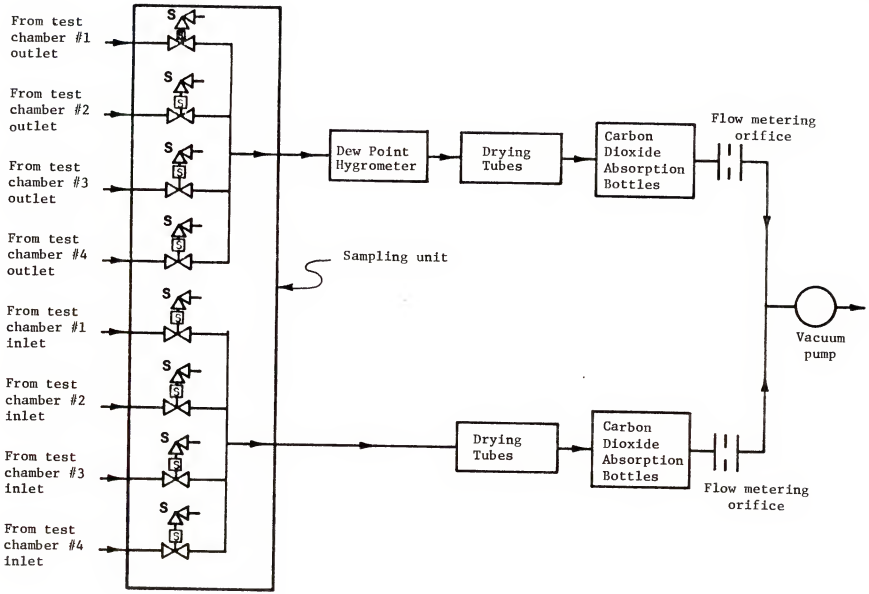

Figure 7. Schematic diagram of measurement system.

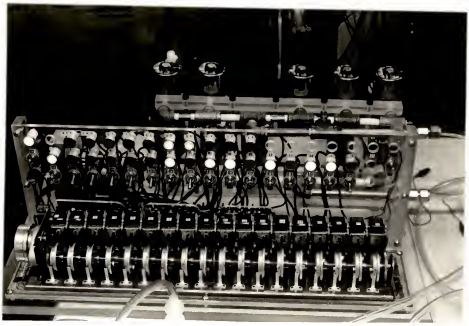

Figure 8. Sampling unit with inlet and outlet manifolds, solenoid valves and cam timer.

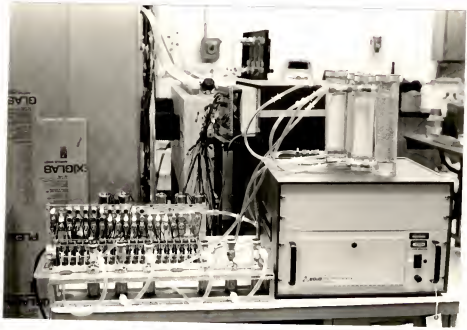

Figure 9. Measurement system with sampling unit, dew point hygrometer at bottom right, drying tubes (on hygrometer) and carbon dioxide absorption bottles (left foreground).

samples from one of the test chambers could be measured for 15 minutes, at which time the appropriate switches were activated to begin sampling from another test chamber. The cycle was repeated every hour.

Air drawn from the test chamber outlets was tubed from the sampling device to an EG&G dew point hygrometer, where the dew point of the air from the test chamber could be measured. Dew point sensing within the instrument was accomplished by condensation of moisture on a polished mirror and by measuring the resulting change in mirror reflectivity. Readouts of these measurements were obtained by connecting the dew point hygrometer to the Esterline Angus data acquisition system. Sufficient time lapse was provided between consecutive dew point readings for purging of the previous sample from the system.

The outlet of the dewpoint instrument was connected to a set of drying tubes filled with Drierite, a self indicating dessicant, in order to dry the air prior to measurement of carbon dioxide levels. The air drawn from the test chamber inlets was tubed from the sampling device directly to a separate set of drying tubes.

The dried inlet and outlet air streams were each passed through separate sets of absorption bottles filled with Ascarite (a carbon dioxide absorbent) to determine the difference in levels of carbon dioxide between inlets and outlets. Dessicants were also provided in these bottles

to absorb any moisture released by reaction of the carbon dioxide with the Ascarite. This entire arrangement, including the sampling unit, dew point instrument, drying tubes and carbon dioxide absorption bottles, is shown in Figure 9.

Air flow through both the inlet and outlet streams was metered by two separate Millipore flow limiting orifices. The orifices were chosen from a large set after calibration, to ensure equal flow rates through inlet and oulet tubing. These orifices permitted sample flow rates of one litre per minute through each. The orifices were located in a manifold downstream of the instrumentation, and the air flowing through them was drawn by vacuum pump that was located further downstream.

Additional Instrumentation

For convenient and accurate weighing of the samples, a Mettler H-35 balance was placed within the chamber. The balance enabled weighing of samples of up to 160 grams in weight with an accuracy of 0.0001 grams. The location of the balance within the walk-in chamber ensured that steady state conditions would exist prior to the test, thus eliminating any potential problems of moisture condensation on the fruit after the test. Thus, the critical parameter, $\dot{M}$ could be determined with the desired accuracy.

For accurate measurement of the other critical parameter (the skin thickness, τ), a Unitron microscope was used.

This enabled measurement of dimensions to within 3.8 microns which was sufficiently accurate for purposes of this research.

Advantages and Disadvantages of the Setup

The advantages of such a setup for the measurement of transpiration rates are listed below.

1. Temperatures within the test chambers are stable, and at the test levels desired due to the excellent heat exchange characteristics involved.

2. Relative humidity levels within the test chambers are extremely stable. Saturated solutions do not change in solute concentration, even if large quantities of water are evaporated, thus resulting in a constant relative humidity over the test period.

3. Air flow rates may be changed or held constant to suit test conditions.

4. Heat loads on the test chamber are minimized, since they are located within a large chamber at the same temperature.

5. The walk-in chamber provides a convenient storage space so that fruits may be brought to test temperatures before experiment. This ensures steady state conditions throughout the experiment.

6. The use of four test chambers facilitates simultaneous measurement of transpiration rates at different enviromental conditions, thereby eliminating any variability between samples that might occur if the fruit were not simultaneously tested. This ensures the applicability of the model to the same batch of fruit.

7. The presence of a balance within the walk-in chamber permits immediate weighing after the test, and eliminates the possibility of errors due to condensation that might occur if the fruits were to be transported outside the chamber for weighing. Also, weighing before the test can be done at the same temperature as the test, thereby ensuring the important steady state conditions at the beginning of the test.

8. Simultaneous measurement of transpiration and respiration rates are possible.

The disadvantages of the setup are listed below.

1. A relatively low air flow is necessitated due to the limitations in the strength of the polyethylene bottles and the sealant. This problem could be rectified by use of stronger materials.

2. Clogging of the tubing through the salt solution due to crystallization, and entrainment of liquid through the tubes are problems that occur in the control of relative humidity. They crystallization problem is controlled by periodic cleaning of the tubing. Entrainment problems may be eliminated by the use of filters.

3. The measurement of respiratory carbon dioxide evolution rates is not as accurate as would be possible with an experimental setup holding larger quantities of fruit.

Experimental Procedure

Experiments were conducted in February and March 1980, for determination of parameters and verification of the mathematical model. Tomatoes of the FTE-12 variety were picked twice a week, over a three-week period from the same row of plants in Immokalee, Florida, and transported to the test site. They were then stored at the test temperature within the walk-in chamber until thermal equilibrium was attained. A sufficient number of fruits were picked each time so that two 24-hour replications of the experiment could be run. Shipments of the fruit were so scheduled as to ensure continuity of the experiment. The procedure of

frequent harvesting was followed so that all fruits could be tested at roughly the same time after harvest, thereby minimizing variability that might have arisen otherwise. Furthermore, the fruits picked were "breakers"; i.e., those fruit that showed a very slight change in color at the base, but were otherwise green in color. This criterion was used in an attempt to test all fruits at as close to the same stage of maturity as was possibly determinable.

After storage within the walk-in chamber, the fruits were tested. Tests were performed at temperatures of 10°C (50°F), 12.8°C (55°F) and 15.6°C (60°F). Four replications were performed at each storage temperature. Since 4 different relative humidities were tested at each temperature, data for transpiration rates at 12 different vapor pressure differences were obtained. The air flow rate through each test chamber was maintained at 45 litres per minute (1.6 standard cubic feet per minute). To account for any leakage losses from the test chambers, the air velocity within each of them was subsequently measured using an Annubar flow measuring tube. These results were used in calculations involving the convective mass transfer coefficient, and respiration rates. The following procedures were used for the tests.

Transpiration and Respiration Rates

Sixty fruit were individually marked and weighed on the balance within the walk-in chamber, and were divided

into 4 equal batches of 15 fruit each. Each batch of fruit was placed in a separate test chamber. Within each test chamber, the samples rested on a pliable base made of shade-cloth. Adequate spacing was provided between individual fruit to prevent physical contact and to permit free air circulation. The chambers were then sealed, and the fruit allowed to remain under the controlled conditions for 24 hours.

During the time period of the test, the temperatures and dew points in each test chamber were continuously monitored by the Esterline Angus data acquisition system, and the observations recorded automatically every 15 minutes. At the end of the test, the fruit were removed from the test chambers, and individually weighed to determine the moisture loss.

Respiration data were also obtained during the course of these tests. This was done by individually weighing the carbon dioxide absorption bottles before and after each test. The weight increases from both inlet samples and outlet samples were calculated. The difference between these increases was considered to be due to the difference in carbon dioxide concentrations between the inlet and outlet resulting from respiration. The respiration rate was thus calculated from these data. This gravimetric method was used since it was determined from an error analysis that it was the most accurate method possible with

the resources available. Details of this analysis are presented in Appendix D.

Surface Areas, Radii and Skin Thicknesses

After each 24-hour test, 12 fruits (three from each test chamber) were selected, and their radii, surface areas and skin thicknesses were measured. Thus, for the entire run of the experiment, data were compiled for 144 tomatoes of various sizes. The following procedures were used.

Radii. Since tomatoes are not precisely spherical, diameters were measured by calipers along three mutually perpendicular axes on each tomato. The results were averaged for each fruit, and the radius calculated.

Surface areas. Each tomato was individually peeled, the sections placed on paper, and their outlines traced. Determination of surface areas was accomplished by using a Talos digitizer. The outline of the sections were manually tracked, and the coordinates automatically fed into the digitizer, where the computations were performed and the results displayed. These results were also used for development of an empirical relation between mass and surface area.

Skin thicknesses. Three thin sections of fruit flesh, including the skin layer, were cut from each fruit. The cuts were made in a direction perpendicular to the skin layer, so that cross sections of the skin would be visible. The skin thicknesses were measured using a Unitron microscope with phase optics, which measured dimensions to the

nearest 3.8 microns. The results for all three sections were averaged and taken to be representative of the value for the fruit. Since a large part of the moisture loss from tomatoes occurs through the calyx, some sections from this region were also cut and measured.

Summary of Measurement Methods

The following is a list of the parameters that required experimental determination for purposes of this research, together with their methods of measurement.

Rate of moisture loss from fruit $\dot{M}$. This was determined by weight loss measurements on individual fruit after a 24-hour period in storage. The results were corrected for losses due to respiratory carbon dioxide.

Surface area (A). Determination of this parameter was accomplished by peeling samples, tracing the outlines, and measuring the surface area of the traces on a digitizer.

Skin thickness (τ). A microscope was used to measure skin thicknesses from thin fruit sections.

Air velocity (V). This parameter was originally estimated by knowing the flowmeter settings and the dimensions of the test chambers. Subsequent measurement within each test chamber was made with an Annubar flow measuring tube.

Ambient temperature (T_h). Thermocouples placed within the test chambers were used for measurement of the ambient temperature.

Ambient water vapor pressure (p_∞). Dew points of samples from each of the test chambers were measured by using a dew point hygrometer, and the vapor pressures were calculated from these data. The values were corrected to account for any errors due to the moisture transpired from the fruits.

Rate of respiratory heat generation (u). The rate of carbon dioxide evolution from the fruit through the test period was found by absorption of carbon dioxide from inlets and outlets of the test chambers. The respiratory heat generation rate was calculated accordingly.

Radius of fruit (R). Measurements of diameters along three mutaully perpendicular axes of each fruit were averaged, and the radii calculated.

CHAPTER VI

RESULTS AND DISCUSSION

The results of investigation for determination of the parameters ϕ and k_s, as well as those for subsequent verification of the mathematical model, has been obtained by using transpiration rate values from those fruit that were undamaged. Moisture losses from damaged fruit were found to be far higher than those from undamaged fruit, and depended on the extent of damage. Several different types of damage were observed. These included unhealed radial and concentric growth cracks, sand scars and bruises. The data for fruit identified as damaged were eliminated from consideration, due to the extreme variability of the results involved. Damage to fruit generally results in an increased respiration rate. However, since respiration measurements were made on the entire batch of fruit, it was not possible to determine the respiration rate for individual, undamaged fruit. The effect of the resulting error on model accuracy is small as indicated by the error analysis presented in Appendix C.

Directly Measured Parameters

Transpiration Rates

The transpiration rates for each fruit were determined from data on weight loss and area. However, surface areas were not measured for each individual fruit. Thus, their values were individually calculated from the mass of the fruit by using the developed empirical equation between surface area and mass. The details of this equation are presented in the section on surface areas.

The results for transpiration rates are presented in Table 2, along with the environmental temperature and water vapor pressure. Table 2 also presents the apparent water vapor pressure difference (the vapor pressure difference calculated by assuming the evaporating surface to be at the ambient temperature), for each environmental condition. The real vapor pressure difference is different from the apparent value, and is calculated in the mathematical model.

A plot of the transpiration rate versus the apparent vapor pressure difference is presented in Figure 10. Statistical regression performed on the data from Table 2 indicated the expected nonlinear trend in this curve. The equation for the best fitting curve is

$$\dot{m} = 0.038557 \cdot (p_{sa} - p_{\infty})^{0.9536} \qquad (5\text{-}1)$$

TABLE 2

EXPERIMENTAL TRANSPIRATION RATES OF FTE-12 TOMATOES AT VARIOUS ENVIRONMENTAL CONDITIONS

Average Storage Temperature (°C)	Apparent Water Vapor Pressure Difference (mm Hg)	Number of Samples Tested	Mean Transpiration Rate (mg/cm^2 hr)	Standard Deviation (mg/cm^2hr)
10.4	1.1011	40	0.0348	0.0100
10.4	2.6509	44	0.0973	0.0248
10.4	3.8990	38	0.1387	0.0290
10.4	5.4584	33	0.1842	0.0373
13.4	1.7541	39	0.0765	0.0182
13.4	3.7563	38	0.1422	0.0229
13.4	5.1687	33	0.1823	0.0250
13.4	7.3017	27	0.2482	0.0304
16.0	2.2393	52	0.0928	0.0284
16.0	4.7968	41	0.1821	0.0370
16.0	6.6209	50	0.2339	0.0427
16.0	8.4652	42	0.2831	0.0413

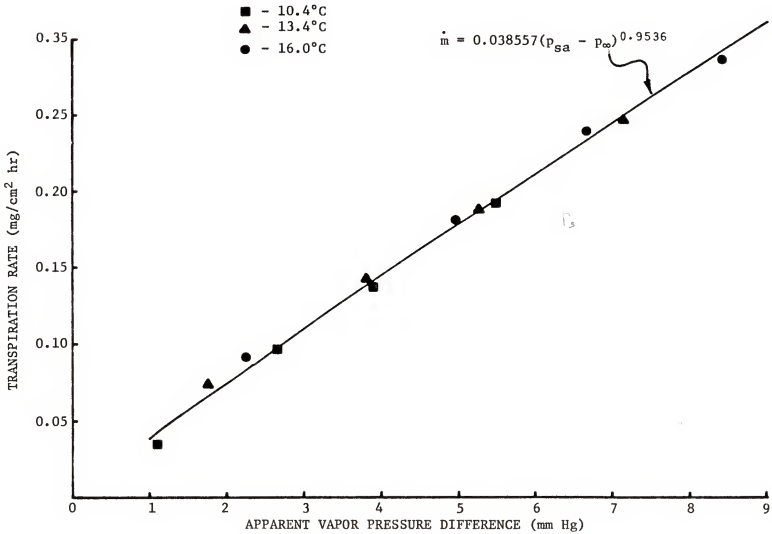

Figure 10. Graph of experimentally determined transpiration rates versus apparent water vapor pressure difference.

where

p_{sa} = apparent water vapor pressure at the evaporating surface

A correlation coefficient of 0.9965 was obtained for the above relation. These data yielded the values of $\dot{m}$, T_b and p_∞ for use in the determination of the skin parameters ϕ and k_s, and also sufficient data points for comparison with predicted values.

Skin Thickness

Skin thicknesses measured for each fruit were relatively uniform, and exhibited no variation with fruit size, fruit shape or experimental conditions. No relation was observed between skin thickness and the location on the fruit from which the samples were taken. Samples taken from the central region of the calyx, however, were several times thicker than those taken from other locations on the fruit. However, due to the relative dryness of the tissue of the central region of the calyx, as well as the tissue immediately beneath it; these results were not used in the analysis. Samples taken from regions at the periphery of the calyx were found to have the same skin thicknesses as those from the rest of the fruit. Furthermore, the tissues immediately beneath these regions were found to be highly turgid, indicating the possibility of a high local transpiration rate. Thus, these readings were used for subsequent analysis. The results are listed below.

Mean skin thickness (τ) = 0.00598 cm

Standard deviation = 0.00064 cm

Number of fruit tested = 144

Number of samples per fruit = 3

Total number of samples measured = 432

Rate of Respiratory Heat Generation

The values for respiratory heat generation rate were calculated from carbon dioxide evolution data in the manner described in Appendix E. As expected, the rate of respiration was found to depend on temperature of storage. The results are listed in Table 3, with the rate of heat production per unit mass (BTU/ton day). The values are within the ranges presented by Lutz and Hardenburg (41) for the corresponding storage temperatures.

Radius Measurements

Linear regression was performed on the measured data (144 values) and an empirical relation found between fruit radius and fruit mass. The relation is presented below.

$$\log_e (R) = 0.2993 \cdot \log_e (M) + 0.30556 \qquad (5\text{-}2)$$

or

$$R = 0.67865 \cdot (M)^{0.2993} \qquad (5\text{-}3)$$

TABLE 3

RESPIRATORY HEAT GENERATION RATES OF FTE-12 TOMATOES AT THREE STORAGE TEMPERATURES

Storage Temperature (°C)	Respiratory Heat Generation Rate (u) (cal/cm^3hr)	Standard Deviation (cal/cm hr)	Respiratory Heat Production Rate (BTU/ton day)	Ranges Obtained from Lutz and Hardenburg (41) BTU/ton day
10.4	0.04694	0.00434	4050	2630 - 4530
13.4	0.05517	0.00312	4760	3080 - 5300
16.0	0.06470	0.00346	5580	3600 - 6200

where

M = Mass of fruit (g)

R = Radius of fruit (cm)

Since the density of tomatoes is approximately the same as that for water (1 g/cm^3), equation 5-2 also expresses the relation between radius and volume (cm^3) of the fruit. Thus, this relationship may be compared to that for a perfect sphere.

$$R = 0.6204 \cdot (V_f)^{0.333} \tag{5-4}$$

where

V_f = Volume of fruit (cm^3)

A comparison between equations 5-3 and 5-4 indicates that tomatoes are only approximately spherical. The correlation coefficient obtained for equation 5-2 was 0.89, indicating that other factors such as shape may account for 21% of the variation in R. Since it was determined from the error analysis (Appendix C) that errors in R would not have a significant effect on the accuracy of the model, no attempts were made to model the actual shape of the fruits. Equation 5-3 was used for prediction of the radii of individual fruit.

Surface Areas

Statistical regression procedures were used for the development of an empirical relation between surface area and fruit mass. The graph is shown in Figure 11. The following relation was obtained for the curve of best fit.

$$\log_e (A) = 0.65626 \cdot \log_e (M) + 1.60428 \qquad (5\text{-}5)$$

or

$$A = 4.97426 \cdot (M)^{0.65626} \qquad (5\text{-}6)$$

where

A = Surface area (cm^2)

M = Mass (g)

Equations 5-5 and 5-6 may be used as relations between surface area and fruit volume, due to the fact that the density of the fruit is approximately the same as that of water. Thus, a comparison may be made between equation 5-6 and the relation between surface area and volume of a perfect sphere.

$$A = 4.8360 \cdot (V_f)^{0.6667} \qquad (5\text{-}7)$$

The constants in equations 5-6 and 5-7 are close in value, indicating that for purposes of estimation of surface areas of tomatoes, the assumption of sphericity is

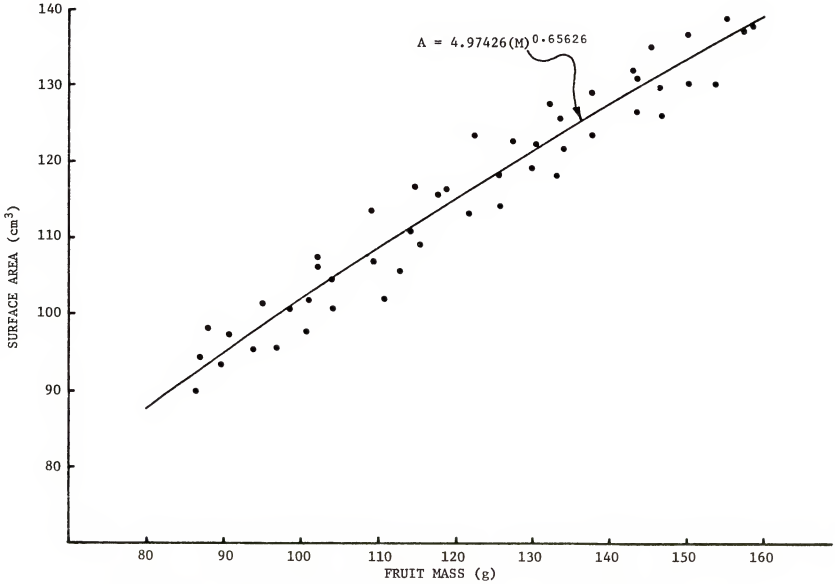

Figure 11. Graph of surface area versus mass for FTE-12 tomatoes.

justifiable. A correlation coefficient of 0.9353 was obtained for equation 5-5. Thus 13% of the variation in surface area appears to be due to variations in shape. No further investigation was conducted on the effect of shape on surface area, primarily due to the error analysis, which indicated very little effect on the model due to errors in surface area. The equation 5-6 is, therefore, the empirical relation to be used for estimation of surface area from the mass.

Air Velocity

The average air velocity in the test chambers was determined to be 0.36 cm/sec. This value was lower than expected due to leaks from the test chambers. Low values of air velocity can result in variable relative humidity at different points along the fruit surface and can also result in stratification within the test chamber. However, the large spacing provided between tomato samples in the test chamber was considered to be sufficient to prevent stratification. Furthermore, since moisture loss from tomatoes is localized in the area around the calyx, it was assumed that for purposes of transpiration calculations, the relative humidity may be considered as constant over the entire evaporating surface.

Fractional Pore Area and Thermal Conductivity

Using the directly measured parameters, equation 4-25 was used for the measurement of fractional pore area (ϕ). The procedure used was that outlined in the theoretical analysis in Chapter 3. The value of the thermal conductivity of pore material was calculated by using equation (4-13) and the procedure described in the theoretical analysis. Sample calculations for the measurement of ϕ and k_s are presented in Appendices F and G. The values obtained for ϕ and k_s were then corrected by using the procedure outlined in Appendix H. The results are presented below.

Mean value of ϕ = 0.000317

Standard deviation = 0.0000882

k_s = 1.652 cal/cm hr°C

The value of d indicates that a very small fraction of the fruit skin (0.0317%) is covered by pores, and that transpiration occurs through this small area. The value of k_s is an estimate obtained from the deviation from linearity of the curve in Figure 10. No value of standard deviation is presented for k_s, since k_s is determined for only one transpiration rate as presented in Appendix G. The value of k_s presented above is used as the representative value for all pores.

A check of the value of k_s is necessary in order to ascertain whether it is consistent with that for fruit materials which consist largely of water and air within a cellulose matrix. Since a large portion of the pore volume is composed of air and the available literature presents values that primarily apply to fruit flesh (with a high water content and low air volume), such verification is not readily obtained. The only fruit material with a large air volume, for which thermal conductivity information is available, is orange rind. Data from Mohsenin (48) indicate that the thermal conductivity of orange rind is approximately 1.56 cal/cm hr°C. This value, while not representative of porous regions of the tomato skin, is the only index available for verification of the value of k_s. Since the thermal conductivites presented appear to be fairly close in value, the value of k_s may be considered to be consistent with that which might be expected for a material of similar nature.

Prediction of Transpiration Rates

Using the calculated values of ϕ and k_s, predictions of transpiration rates were attempted at different values of vapor pressure difference. Two types of predictions were attempted, and are discussed below.

Prediction of General Trends

Using only the mean value of ϕ, transpiration rates were calculated for each of environmental conditions presented in Table 2. The procedure followed was the iterative procedure involving equations 4-25 and 4-13. A sample calculation is presented in Appendix I. It was found that the iterative procedure yielded convergence to a solution after 5 to 7 iterations.

The results are shown in Table 4 with values obtained from the nonlinear curve of best fit represented by equation 5-1. From Table 4, it may be seen that good agreement is obtained between experimental and calculated values. Also listed in Table 4 are the values of the apparent water vapor pressure difference (calculated assuming that the evaporating surface is at the ambient temperature), actual water vapor pressure difference (calculated from theoretical estimates of the surface temperature) and temperature of the evaporating surface. It may be noted that the temperature of the evaporating surface at high water vapor pressure differences is about 2°C lower than the ambient temperature.

A graph of predicted transpiration rate versus actual water vapor pressure difference is presented in Figure 12. The curve is found to be linear indicating the importance of accurate calculation of surface temperature. The linearity of the curve also indicates that the transpiration

TABLE 4

COMPARISON OF PREDICTED TRANSPIRATION RATES WITH VALUES FROM CURVE OF BEST FIT

Storage Temperature (°C)	Calculated Surface Temperature (°C)	Apparent Water Vapor Pressure Difference (mm Hg)	Actual Water Vapor Pressure Difference (mm Hg)	Transpiration Rate from Best Fit Curve (mg/cm^2hr)	Predicted Transpiration Rate (mg/cm^2hr)
10.40	10.12	1.1011	0.9316	0.0412	0.0397
10.40	9.74	2.6509	2.2519	0.0977	0.0968
10.40	9.43	3.8990	3.3180	0.1411	0.1422
10.40	9.13	5.4584	4.6450	0.1945	0.1952
13.40	13.03	1.7541	1.4474	0.0659	0.0647
13.40	12.55	3.7563	3.1079	0.1362	0.1369
13.40	12.21	5.1687	4.2841	0.1847	0.1836
13.40	11.72	7.3017	5.9628	0.2567	0.2585
16.00	15.48	2.2393	1.8025	0.0832	0.0843
16.00	14.88	4.7968	3.8719	0.1720	0.1698
16.00	14.45	6.6209	5.3562	0.2338	0.2307
16.00	14.02	8.4652	6.8640	0.2956	0.2973

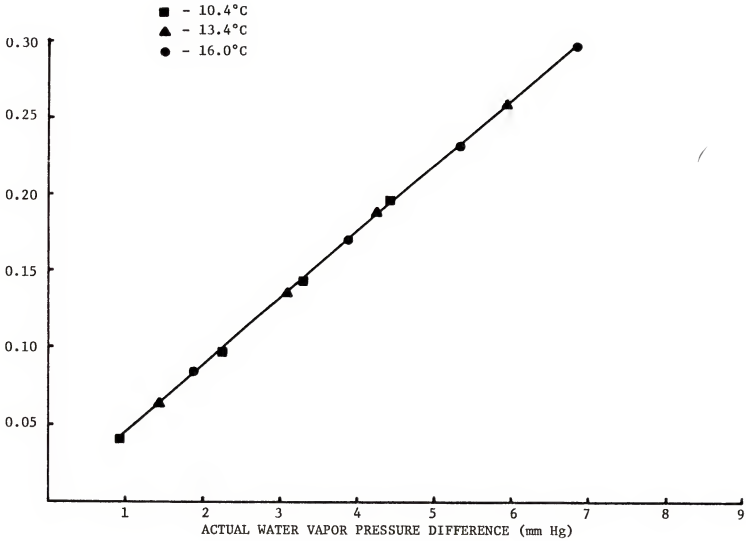

Figure 12. Graph of predicted transpiration rate versus actual water vapor pressure difference.

coefficient of FTE-12 tomatoes does not vary with water vapor pressure difference in the ranges under consideration.

Prediction for Individual Samples

In this analysis, predictions of transpiration rate were made for each individual fruit tested. This was done by using a range of values for ϕ within two standard deviations of the mean value; a range within which 95% of all values in a normal distribution are contained. Predictions were made using successively incremented values of ϕ, and the closest prediction thus obtained was used as the representative value for that sample. The value of ϕ determined was that value within the expected range that yielded the best prediction for transpiration rate of the sample. Values of ϕ outside this range were not used even if accurate prediction was not obtained within the range. The average values of the calculated and experimental transpiration rates are presented in Table 5, along with the average value of ϕ for the batch of fruit.

The predicted values were in close agreement with experimental results, and showed no significant differences at the 99% confidence interval when checked with Student's t tests. The values of ϕ obtained were found to be close to the average value. A slight downward trend in the mean value of ϕ at the highest storage temperature was observed at higher vapor pressure deficits. To check for any skin

TABLE 5

COMPARISON OF CALCULATED AND EXPERIMENTAL TRANSPIRATION RATES FOR INDIVIDUAL SAMPLES

Storage Temperature (°C)	Apparent Water Vapor Pressure Difference (mm Hg)	Mean Experimental Transpiration Rate (mg/cm^2hr)	Standard Deviation	Mean Calculated Transpiration Rate (mg/cm^2hr)	Standard Deviation	Mean Fractional Pore Area (ϕ)	Standard Deviation
10.4	1.1011	0.0348	0.0100	0.0350	0.0096	0.0002811	0.0000801
10.4	2.6509	0.0973	0.0248	0.0969	0.0243	0.0003196	0.0000850
10.4	3.8990	0.1387	0.0289	0.1386	0.0291	0.0003094	0.0000692
10.4	5.4584	0.1842	0.0373	0.1840	0.0375	0.0002919	0.0000623
13.4	1.7541	0.0765	0.0182	0.0743	0.0145	0.0003058	0.0000778
13.4	3.7563	0.1422	0.0229	0.1424	0.0230	0.0003012	0.0000564
13.4	5.1687	0.1823	0.0250	0.1818	0.0247	0.0003098	0.0000448
13.4	7.3017	0.2482	0.0304	0.2484	0.0298	0.0003987	0.0000377
16.0	2.2593	0.0928	0.0284	0.0887	0.0218	0.0003230	0.0000929
16.0	4.7968	0.1821	0.0370	0.1821	0.0373	0.0003192	0.0000739
16.0	6.6209	0.2339	0.0427	0.2342	0.0428	0.0003165	0.0000608
16.0	8.4652	0.2831	0.0413	0.2827	0.0415	0.0002966	0.0000460

permeability reduction at high water vapor pressure differences, all values of ϕ were compared with each other using Student's t tests. The results indicated no significant differences between any of the values of ϕ at the 99% confidence interval. Thus it may be concluded that, within the vapor pressure difference ranges tested, the permeability of the skins of FTE-12 tomatoes to moisture transfer remains constant.

Transpiration Coefficient on a Unit Mass Basis

The transpiration coefficients of FTE-12 tomatoes on a per unit mass basis are listed in Table 6. The values are presented for a range of fruit weights, since the ratio of surface area to mass decreases with increasing mass. Transpiration coefficients for other fruits and vegetables on a mass basis are presented by Sastry et al. (62).

Discussion on Nonlinear Trends

The nonlinear trend of the predicted results must result from the presence of nonlinear parameters within the mathematical model. The only nonlinear relation between parameters in the model is that between the saturation vapor pressure at the evaporating surface, and the temperature of that surface. The relation is expressed by equation 4-28.

TABLE 6

TRANSPIRATION COEFFICIENTS ON A PER UNIT MASS BASIS

Mass (g)	Surface Area-Mass (cm^2/Kg)	Mean Transpiration Coefficient (Mass Basis) (mg/Kg hr mm Hg)	Range (mg/Kg hr mm Hg)
80	1102.5	50.4	36.3-64.4
90	1058.8	48.4	34.9-61.8
100	1022.0	46.7	33.7-59.7
110	988.2	45.1	32.6-57.7
120	959.2	43.8	31.6-56.0
130	933.1	42.6	30.8-54.5
140	910.0	41.6	30.0-53.1
150	888.7	40.6	29.3-51.9
160	869.4	39.7	28.7-50.8

As illustrated in Figure 13, this is a curve of increasing slope with increasing temperature. Thus, a specific surface temperature reduction at a high storage temperature would result in a greater vapor pressure reduction than would a similar surface temperature reduction at a lower storage temperature. If a curve of transpiration rate against apparent vapor pressure difference is plotted using data from different storage temperatures, the difference in the behavior of the saturation vapor pressure curve at the different temperatures could cause the appearance of a nonlinear trend in the curve. However, if transpiration rates are plotted against actual vapor pressure difference (calculated by considering actual surface conditions), the nonlinear trend is eliminated.

If a graph of transpiration rate versus actual vapor pressure difference is plotted using data from the same storage temperature, any nonlinearity observed could be due in part to variations in concentration of solutes near the evaporating surface. At high vapor pressure differences, the relatively large mass of water initially evaporated could cause increased solute concentration near the evaporating surface. This would tend to reduce the transpiration rate to a lower value than expected and cause a nonlinearity in the curve. Such trends have not been noted in the research, indicating that within the range of test conditions

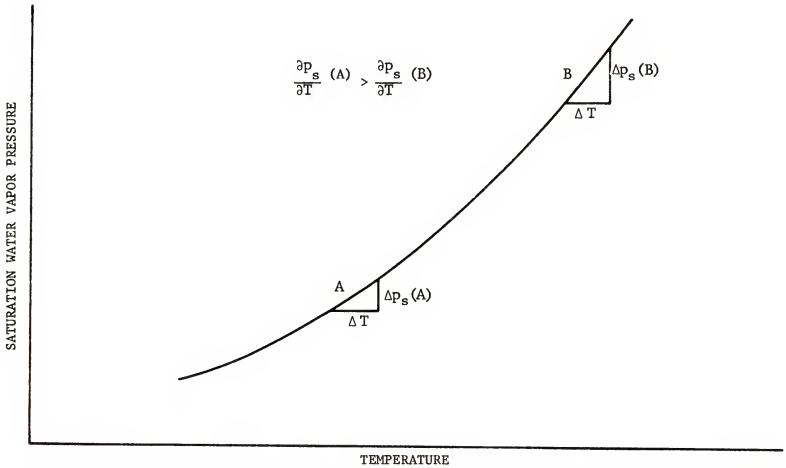

Figure 13. Illustration of behavior of saturation line in the range of the test.

the implicit assumption of constant solute concentration is justifiable. However, for larger vapor pressure difference ranges, such effects may become significant.

Another factor that may contribute to nonlinearity in such a graph is a reduction in skin permeability with increasing water vapor pressure difference. Such trends have not been found to be significant for the vapor pressure difference ranges under consideration. However, it is not known whether or not permeability reductions would occur at even higher water vapor pressure gradients. Further research is necessary for investigation of such phenomena.

Miscellaneous

The effect of respiratory heat generation on transpiration rate appears to be very small, and for the ranges of vapor pressure difference investigated, was found to be much smaller than the evaporative cooling effect. This is due to the small value of u. Only under saturated conditions of storage does the respiratory heat generation term become significant. Due to the difficulty involved in obtaining a saturated environment in the experimental setup, the prediction obtainable from the mathematical model for saturated environmental conditions could not be verified. This would be suitable for further research.

The low value of the boundary layer resistance to moisture transfer, even at the low air velocities indicate that it is not a highly significant factor. However, it is desirable to account for its effect as well. Studies of the effects of increased air velocity would be a topic to be investigated in future research.

CHAPTER VII

CONCLUSIONS

The following conclusions are made.

1. Within the range of conditions of the test, the mean transpiration coefficient of mature green FTE-12 tomatoes on a per unit area basis is 0.04567 mg/cm^2 hr mm Hg, and the standard deviation is 0.01271 mg/cm hr mm Hg.

2. The transpiration coefficient of FTE-12 tomatoes on per unit mass basis varies with the mass, and range from a low value of 28.7 mg/Kg hr mm Hg for a 160 g fruit, to a high value of 64.4 mg/Kg hr mm Hg for a 80 g fruit.

3. The skins of FTE-12 tomatoes are highly impervious to moisture transfer, possessing a fractional pore area of only 0.000317

4. For the range of vapor pressure differences tested, the permeabilities of the skins of FTE-12 tomatoes are constant and independent of the vapor pressure difference.

5. The shape of FTE-12 tomatoes may be approximated as spherical for purposes of calculation of surface area.

6. The mathematical model predicted transpiration rates that are in close agreement with experimentally measured values.

7. Nonlinear trends in transpiration rate for increasing water vapor pressure difference are due to cooling effects at the surface of evaporation, and the trends may be linearized by calculation of vapor gradients using the mathematical model.

8. Evaporating surface temperatures of FTE-12 tomatoes may be lower than the ambient temperature by up to 2°C, depending on environmental conditions.

9. The rate of respiratory heat generation for mature green FTE-12 tomatoes varies from 4050 BTU/ton day at 10.4 C, to 5580 BTU/ton day at 16 C.

10. The respiratory heat generation rate has a very small effect on transpiration for the ranges of vapor pressure difference investigated.

11. Air velocity in storage has a very small effect on moisture loss.

CHAPTER VIII

SUGGESTIONS FOR FUTURE RESEARCH

The following is a list of suggestions for future research.

1. The prediction of the mathematical model for transpiration rates under saturated environmental conditions remains to be checked, and experimental verification is necessary.

2. Verification of the model for other approximately spherical, skinned commodities would be desirable. Examples of such commodities include apples, plums and cherries.

3. Measurement of transpiration rates at higher ranges of vapor pressure difference would provide information as to whether or not skin permeabilities are reduced under these conditions.

4. Measurement of transpiration rates of FTE-12 tomatoes at other stages of maturity and at different times after harvest would contribute to a better overall understanding of the process.

APPENDIX A

DRIVING FORCE FOR DIFFUSIVE MASS TRANSFER

The most commonly used relation for diffusive mass transfer is Fick's law of diffusion where, for species i in a mixture of gases

$$\dot{m}_i = -\delta_i \nabla C_i \tag{A-1}$$

where

$\dot{m}_i$ = Molar flux of species i

C_i = Concentration of species i

δ_i = Molecular diffusivity of species i in the mixture

However, Fick's law is not strictly applicable to non-isothermal systems, such as the situation dealt with in transpiration. Also, for variable density of the medium, the mole fraction is a more convenient concept for use as a driving force. Thus, Fick's law becomes

$$\dot{m}_i = -\delta_i C \nabla x_i \tag{A-2}$$

where

x_i = Mole fraction of species i

C = Total molar concentration of mixture

The general concept for the driving force for mass transfer is the chemical potential for the species which is defined for a perfect gas as

$$\mu_i = C_{pi} \cdot \theta - C_{pi} \cdot \theta \cdot \log_e\left(\frac{\theta}{\theta^*}\right) + R_d \cdot \theta \cdot \log_e(x_i) + R_d \cdot \theta \cdot \log_e(P) \qquad \text{(A-3)}$$

where

μ_i = Chemical potential of species i

θ = Absolute temperature

θ^* = Reference temperature

C_{pi} = Specific heat of species i at constant pressure, assumed temperature inedpendent

R_d = Universal gas constant

P = Total pressure

Thus,

$$\mu_i = \mu_i(\theta, P, x_i)$$

In a constant pressure system

$$\nabla\mu_i = \frac{\partial\mu_i}{\partial x_i}\nabla x_i + \frac{\partial\mu_i}{\partial\theta}\nabla\theta \qquad \text{(A-4)}$$

The term involving the gradient of x_i is the driving force due to the gradient in the mole fraction, while the term involving the gradient of θ is the driving force for thermal diffusion. In the nonisothermal transpiration situation considered in this research, thermal diffusion effects may be neglected due to the relatively small

temperature gradients under consideration. In addition, the gradients in concentration of all other species in the mixture cause driving forces for the diffusion of species i, but their effects are generally small.

While the chemical potential is the generalized concept for the driving force for mass flow, it is difficult to determine, and is not commonly used in practice. For these reasons, the mole fraction x_i appears to be a satisfactory choice for the driving force for diffusive mass transfer. Furthermore, the mole fraction may be directly converted into partial pressures, the values for which are easily obtainable in the case of water vapor. The relation between mole fraction and partial pressure for constant total pressure conditions is

$$x_i = \frac{p_i}{p_t} \tag{A-5}$$

where

p_i = Partial pressure of species i

p_t = Total pressure of the mixture

Thus, the partial pressure of water vapor is used as the driving force for transpiration.

It is appropriate to state that in heat transfer equations, the Dufour effect (heat transfer arising from concentration gradients) has been neglected since its magnitude is small.

APPENDIX B

BOUNDARY CONDITION AT EVAPORATING SURFACE

At the evaporating surface, the latent heat removed is continuously supplied by conduction of heat from within the fruit and by conduction (through the pores) from without. Thus,

$$L \cdot \dot{m}_p = Q_{ext} + Q_{int} \tag{B-1}$$

where

Q_{ext} = Heat flux from the exterior to the interface

Q_{int} = Heat flux from the interior to the interface

L = Latent heat of vaporization of water

$\dot{m}_p$ = Rate of mass flow of water vapor per unit pore area

Using a sign convention such that heat flow toward the interface is positive,

$$Q_{ext} = - \left[-k_s \frac{dT(0)}{dz}\right] \tag{B-2}$$

where

k_s = Thermal conductivity of the pore

Thus, the boundary condition becomes

$$k_s \frac{dT(0)}{dz} = L\dot{m}_p - Q_{int} \tag{B-3}$$

To determine Q_{int}, we consider the energy equation for conduction within the fruit.

Since it has been assumed that heat transfer occurs primarily in the radial direction of the fruit, we may write the equation for conduction in the form

$$\frac{1}{r^2}\left[\frac{d}{dr}\left(r^2 \frac{dT}{dr}\right)\right] + \frac{u}{k_f} = 0 \tag{B-4}$$

where

r = Radius coordinate

T = Temperature at radius r

u = Rate of respiratory heat generation per unit volume

k_f = Thermal conductivity of fruit flesh

By rearranging terms in equation B-4 and integrating

$$\frac{dT}{dr} = -\frac{u \cdot r}{3k_f} + \frac{B_1}{r^2} \tag{B-5}$$

where

B_1 = Constant of integration

By applying the condition that the gradient at zero value of r is finite,

$$B_1 = 0$$

Thus,

$$\frac{dT}{dr} = - \frac{u \cdot r}{3k_f} \tag{B-6}$$

The evaporating surfaces are located at a distance d from the center of the fruit, given by

$$d = R - \tau \tag{B-7}$$

where

R = Radius of fruit

τ = Skin thickness

Since, for tomatoes, $R >> \tau$,

$$d = R \tag{B-8}$$

Thus,

$$Q_{int} = - k_f \frac{dT(R)}{dr} \tag{B-9}$$

Substituting the temperature gradient from equation B-6 into equation B-9,

$$Q_{int} = \frac{u \cdot R}{3} \tag{B-10}$$

Substitution of this value for Q_{int} into equation B-3, yields the boundary condition at the evaporating surface

$$k_s \frac{dT(0)}{dz} = L \cdot \dot{m}_p - \frac{u \cdot R}{3}$$

APPENDIX C

ERROR ANALYSIS

An analysis of the effect of experimental errors on the calculated parameters ϕ and k_s is necessary for proper choice of instrumentation for those parameters that are critical to the accuracy of the model. However, such analyses invariably presuppose an at least approximate knowledge of all variables involved. Since even approximate values of some of the parameters pertinent to this research--especially those which pertain to properties of tomatoes--are unavailable; an analysis has been attempted for some of the data presented by Villa (75) for apples. Even so, all the required values are not available, thereby necessitating assumptions and guesswork in some cases. Thus, the analysis is useful only for purposes of identifying such parameters that may need special accuracy in measurement due to their significant effect on ϕ and k_s. Table C-1 contains a list of all the values of the parameters that have been taken from the literature, or assumed (if no information was available) and the references used for obtaining such values.

TABLE C-1

VALUES OF PARAMETERS USED IN ERROR ANALYSIS

Parameter	Value	Source
L	590 cal/g	Keenan et al. (38)
C_p	0.44 cal/g °K	Keenan et al. (38)
k_s	4.1 cal cm hr °K	Mohsenin (48)
ϕ	0.004	Villa (75)
R	3.8 cm	Assumed
u	0.0104 cal/cm^3 hr	Lutz and Hardenburg (41)
T_b	1.67°C	Villa (75)
$\dot{M}$(to find ϕ)	0.00089 g/hr	Villa (75)
$\dot{M}$(to find k_s)	0.00446 g/hr	Villa (75)
δ	0.000847 g/cm^2 hr mm Hg	National Research Council (49)
h_d	0.012 g/cm^2 hr mm Hg	Villa (75)
p_s	5.1 mm Hg	Villa (75)
p_∞(to find ϕ)	4.75 mm Hg	Villa (75)
p_∞(to find k_s)	3.35 mm Hg	Villa (75)
A	182 cm^2	Calculated from R
τ	0.04 cm	Assumed
$T_b - T_s$ (to find k_s)	0.02°C	Assumed

From equation 4-25, we have

$$\phi = \frac{\frac{\tau}{\delta}}{\frac{A}{\dot{M}}(p_s - p_\infty) - \frac{1}{h_d}} \tag{C-1}$$

The variables in this equation requiring experimental determination are τ, A, $\dot{M}$, p_∞ and h_d. The error in ϕ is then,

$$\Delta\phi = \left(\frac{\partial\phi}{\partial\dot{M}}\right) \cdot \Delta\dot{M} + \left(\frac{\partial\phi}{\partial\tau}\right) \cdot \Delta\tau + \left(\frac{\partial\phi}{\partial A}\right) \cdot \Delta A$$

$$+ \left(\frac{\partial\phi}{\partial p_\infty}\right) \cdot \Delta p_\infty + \left(\frac{\partial\phi}{\partial h_d}\right) \cdot \Delta h_d \tag{C-2}$$

In this analysis, it is assumed that errors in measurement are small, so that higher order terms in the Taylor's series expansion (with respect to each of the variables) may be considered negligible.

$$\frac{\partial\phi}{\partial\dot{M}} = \frac{\frac{\tau}{\delta} \cdot \left(\frac{A(p_s - p_\infty)}{\dot{M}^2}\right)}{\lambda^2} \tag{C-3}$$

where

$$\lambda = \frac{A}{\dot{M}}(p_s - p_\infty) - \frac{1}{h_d}$$

$$\frac{\partial\phi}{\partial\tau} = \frac{1}{\delta \cdot \lambda} \tag{C-4}$$

$$\frac{\partial\phi}{\partial A} = \frac{-\frac{\tau}{\delta\dot{M}}(p_s - p_\infty)}{\lambda^2} \tag{C-5}$$

$$\frac{\partial \phi}{\partial p_\infty} = \frac{\tau \cdot A}{\delta \cdot \dot{M} \cdot \lambda^2} \tag{C-6}$$

$$\frac{\partial \phi}{\partial h_d} = \frac{\tau}{\delta \cdot h_d^3 \cdot \lambda^2} \tag{C-7}$$

Substituting the values from Table C-1 into equations C-3 and C-7, the following results are obtained.

$$\frac{\partial \phi}{\partial \dot{M}} = 0.7431 \ (\text{g/hr})^{-1}$$

$$\frac{\partial \phi}{\partial \tau} = 0.0157 \ (\text{cm})^{-1}$$

$$\frac{\partial \phi}{\partial A} = -3.6 \times 10^{-6} \ (\text{cm}^2)^{-1}$$

$$\frac{\partial \phi}{\partial p_\infty} = 0.00189 \ (\text{mm Hg})^{-1}$$

$$\frac{\partial \phi}{\partial h_d} = 0.0053 \ (\text{g/cm}^2\text{hr mm Hg})^{-1}$$

It appears from the above values, that the most critical paramter is $\dot{M}$, since an error in its measurement would result in a nearly comparable percent error in ϕ.

For the determination of k_s, equation 4-13 must be used. By algebraic manipulation of this equation,

$$k_s = \frac{\omega \cdot \tau}{\xi} \tag{C-8}$$

where

$$\omega = \frac{C_p \dot{M}}{A\phi}$$

$$\xi = \log_e (\eta)$$

$$\eta = \left[\frac{(T_s - T_b)\omega}{\gamma}\right]$$

$$\gamma = \frac{uR}{3} - \frac{L\dot{M}}{A\phi}$$

The parameters in equation 4-13 that must be determined directly by experiment are τ, $\dot{M}$, A, T_b, u and R. Since it is necessary to calculate k_s at a somewhat higher water vapor pressure difference (and hence, a higher value of $\dot{M}$) than that for ϕ, the larger values of $\dot{M}$ and vapor pressure difference (presented in Table C-1) will be used in these calculations. The error in k_s due to errors in directly measured parameters is

$$\Delta k_s = \left(\frac{\partial k_s}{\partial \tau}\right)\Delta\tau + \left(\frac{\partial k_s}{\partial \dot{M}}\right)\Delta\dot{M} + \left(\frac{\partial k_s}{\partial A}\right)\Delta A + \left(\frac{\partial k_s}{\partial T}\right)\Delta T_b + \left(\frac{\partial k_s}{\partial u}\right)\Delta u + \left(\frac{\partial k_s}{\partial R}\right)\Delta R \qquad \text{(C-9)}$$

From equation C-8, we have the following partial derivatives.

$$\frac{\partial k_s}{\partial \tau} = \frac{\omega}{\xi} \qquad \text{(C-10)}$$

$$\frac{\partial k_s}{\partial \dot{M}} = \frac{\omega\left(\xi - \tau\left(\frac{1}{\dot{M}} - \frac{L}{\gamma A\phi}\right)\right)}{\xi^2} \qquad \text{(C-11)}$$

$$\frac{\partial k_s}{\partial A} = -\frac{1}{\xi^2}\left[\frac{\xi\omega\tau}{A} + \frac{\omega\tau}{\eta\gamma^2}\left(\eta\gamma^2 - \frac{L\dot{M}}{A^2\phi}\right)\right] \qquad \text{(C-12)}$$

$$\frac{\partial k_s}{\partial T_b} = \frac{\omega^2 \tau}{\eta \gamma \xi^2} \tag{C-13}$$

$$\frac{\partial k_s}{\partial u} = \frac{\omega \tau R}{3 \gamma \xi^2} \tag{C-14}$$

$$\frac{\partial k_s}{\partial R} = \frac{\omega \tau u}{3 \gamma \xi^2} \tag{C-15}$$

Substituting the values from Table C-1 into equations C-10 to C-15,

$$\frac{\partial k_s}{\partial \tau} = -0.00031 \text{ (cal/cm}^2 \text{ hr °C)}$$

$$\frac{\partial k_s}{\partial \dot{M}} = -0.00093 \text{ (cal/g cm °C)}$$

$$\frac{\partial k_s}{\partial A} = -1.3 \times 10^{-6} \text{ (cal/cm}^3 \text{ hr °C)}$$

$$\frac{\partial k_s}{\partial T_b} = 6.9 \times 10^{-6} \text{ (cal/cm hr °C}^2\text{)}$$

$$\frac{\partial k_s}{\partial u} = 5.0 \times 10^{-7} \text{ (cm}^2\text{/°C)}$$

$$\frac{\partial k_s}{\partial R} = -1.338 \times 10^{-9} \text{ (cal/cm}^2 \text{ hr °C)}$$

It may be noted from the above relations that all the coefficients associated with the various measurement errors are small. Thus, none of the directly measured parameters may be considered critical for the determination

of k_s. However, we must also consider the effect of errors in ϕ and in the surface temperature depression $(T_s - T_b)$ on the error in k_s. Thus, from equation C-8

$$\frac{\partial k_s}{\partial \phi} = - \frac{1}{\xi^2} \left[\frac{\xi \omega \tau}{\phi} - \omega \tau \left(\frac{1}{\phi} + \frac{L\dot{M}}{\gamma A \phi^2} \right) \right] \tag{C-16}$$

$$\frac{\partial k_s}{\partial (T_s - T_b)} = - \frac{\omega^2 \tau}{\eta \xi^2} \tag{C-17}$$

Substitution from Table C-1 yields

$$\frac{\partial k_s}{\partial \phi} = 0.00306 \text{ (cal/cm hr°C)}$$

$$\frac{\partial k_s}{\partial (T_s - T_b)} = 6.9 \times 10^{-6} \text{ (cal/cm hr°C}^2\text{)}$$

Since these coefficients are also small, neither ϕ nor the surface temperature depression $(T_s - T_b)$ are critical for the calculation of k_s.

It is also necessary to consider those parameters that may be critical to subsequent predictions by the mathematical model. Prediction involves accurate calculation of the temperature depression $(T_s - T_b)$ at the evaporating surface. Thus, from equation 4-13,

$$T_d = T_s - T_b = \frac{\gamma}{\omega} (\varepsilon - 1) \tag{C-18}$$

where

$$\varepsilon = \exp (\sigma)$$

$$\sigma = \frac{\omega \tau}{k_s}$$

The errors in the determination of the variables $\dot{M}$, A, ϕ, u, R and τ on the error in T_d are found in a manner similar to the analyses already presented for ϕ and k_s. Thus, from equation C-18

$$\frac{\partial T_d}{\partial \dot{M}} = \frac{\psi}{A\phi} \tag{C-19}$$

where

$$\psi = \frac{uRA\phi}{3\omega\dot{M}} \left[\varepsilon\left(\sigma - 1\right) + 1\right] - \frac{L\tau\varepsilon}{k_s}$$

$$\frac{\partial T_d}{\partial A} = - \frac{\dot{M}\psi}{A^2\phi} \tag{C-20}$$

$$\frac{\partial T_d}{\partial \phi} = - \frac{\dot{M}\psi}{A\phi^2} \tag{C-21}$$

$$\frac{\partial T_d}{\partial u} = \frac{R}{3} (\varepsilon - 1) \tag{C-22}$$

$$\frac{\partial T_d}{\partial R} = \frac{u}{3\omega} (\varepsilon - 1) \tag{C-23}$$

$$\frac{\partial T_d}{\partial \tau} \quad \frac{\gamma\varepsilon}{k_s} \tag{C-24}$$

Substitution of values from Table C-1 (using higher range value for $\dot{M}$), yields

$$\frac{\partial T_d}{\partial \dot{M}} = -7.907 \ (°C \ hr/g)$$

$$\frac{\partial T_d}{\partial A} = 0.0001936 \ (°C/cm^2)$$

$$\frac{\partial T_d}{\partial \phi} = 8.8083 \ (°C)$$

$$\frac{\partial T_d}{\partial u} = 0.0124 \ (°C \ cm^3 \ hr/cal)$$

$$\frac{\partial T_d}{\partial R} = 3.38 \times 10^{-5} \ (°C/cm)$$

$$\frac{\partial T_d}{\partial \tau} = -0.8776 \ (°C/cm)$$

From the above values, it may be seen that the critical parameters for prediction are $\dot{M}$, ϕ, and τ, since the coefficients corresponding to their errors are relatively large. Since the only critical parameter associated with the estimation of ϕ is $\dot{M}$, we may eliminate ϕ from the group. Thus, special care must be taken in the determination of $\dot{M}$ and τ for the use of the mathematical model.

Total Errors in Results

The preceding analysis is used for identification of critical parameters only. However, the same sensitivity analysis may be used for estimating the errors in the results. The individual errors are estimated as the products of the influence coefficients and the corresponding instrument sensitivities. One method for estimating total error in a given parameter is by simple summation of individual errors, as presented in equation C-2. However, a more reliable method is the use of the square root of the sum of squares of the individual errors. Thus,

$$\Delta p_d = \left\{ \sum_{i=1}^{N} \left[\left(\frac{\partial p_d}{\partial p_i} \right) \Delta p_i \right]^2 \right\}^{1/2} \tag{C-25}$$

where

p_d = Indirectly estimated parameter value

p_i = Measured parameter value

$\left(\frac{\partial p_d}{\partial p_i} \right)$ = Influence coefficient

Table C-2 lists the values of the parameters in equations 4-25 and 4-13 for FTE-12 tomatoes. Values of the influence coefficients and estimated measurement errors are presented in Tables C-3 through C-5. The values of the influence coefficients are calculated from the equations from the preceding sensitivity analysis, using parameter values from Table C-2.

From Table C-3, the individual errors may be substituted into equation C-25 to yield the total error in ϕ

$$\Delta\phi = 0.0000151$$

This corresponds to a total error of 5%.

Using a similar procedure with the values from Tables C-4 and C-5,

$$\Delta k_s = 0.00026 \text{ cal/cm hr } °C$$

$$\Delta T_d = 0.047 \text{ } °C$$

The error of k_s is 0.02% and that of T_d is 6.3%.

TABLE C-2

VALUES OF PARAMETERS FOR ESTIMATION OF ERRORS IN RESULTS FOR FTE-12 TOMATOES

Parameter	Value
L	590 cal/g
C_p	0.44 cal/g °K
k_s	1.65 cal/cm hr °C
ϕ	0.000317
R	2.88 cm
u	0.04694 cal/cm^3 hr
T_b	10.4 °C
$\dot{M}$ (to find ϕ)	0.004 g/hr
$\dot{M}$ (to find k_s)	0.0169 g/hr
δ	0.0008616 g/cm hr mm Hg
h_d	0.6779 g/cm^2 hr mm Hg
p_s	9.432 mm Hg
p_∞ (to find ϕ)	8.331 mm Hg
p_∞ (to find k_s)	5.432 mm Hg
A	115 cm^2
τ	0.00598 cm
$T_b - T_s$ (to find k_s)	0.74 °C

TABLE C-3

INFLUENCE COEFFICIENTS AND ESTIMATED MEASUREMENT IN DETERMINATION OF FRACTIONAL PORE AREA

Measured Parameter	Estimated Measurement Error	Influence Coefficient (Symbol)	Influence Coefficient (Value)	Error in ϕ
$\dot{M}$	0.00002 g/hr	$\partial\phi/\partial\dot{M}$	0.0603 $(g/hr)^{-1}$	1.2×10^{-6}
τ	0.00038 cm	$\partial\phi/\partial\tau$	0.0385 $(cm)^{-1}$	1.46×10^{-5}
A	13.8 cm^2	$\partial\phi/\partial A$	-2.1×10^{-7} $(cm^2)^{-1}$	-2.9×10^{-6}
p_∞	0.15 mm Hg	$\partial\phi/\partial p_\infty$	0.00002 $(mm\ Hg)^{-1}$	3.3×10^{-6}
h_d	0.07 g/cm^2 hr mm Hg	$\partial\phi/\partial h_d$	2.45×10^{-8} $(g/cm^2\ hr\ mm\ Hg)^{-1}$	1.7×10^{-9}

TABLE C-4

INFLUENCE COEFFICIENTS AND ESTIMATED MEASUREMENT ERRORS IN DETERMINATION OF THERMAL CONDUCTIVITY OF PORE MATERIAL

Measured Parameter	Estimated Measurement Error	Influence Coefficient (Symbol)	Influence Coefficient (Value)	Error in k_s (cal/cm hr °C)
τ	0.00038 cm	$\partial k_s/\partial \tau$	-0.027 cal/cm^2 hr °C	-1.03×10^{-5}
$\dot{M}$	0.00002 g/hr	$\partial k_s/\partial \dot{M}$	-0.030 cal/g cm °C	-6.0×10^{-7}
A	13.8 cm^2	$\partial k_s/\partial A$	-1.9×10^{-5} cal/cm^3 hr °C	-2.6×10^{-4}
T_b	0.2 °C	$\partial k_s/\partial T_b$	2.9×10^{-5} cal/cm hr °C^2	5.8×10^{-6}
u	0.01 cal/cm^3 hr	$\partial k_s/\partial u$	7.6×10^{-8} cm^2/°C	7.6×10^{-10}
R	0.1 cm	$\partial k_s/\partial R$	-1.2×10^{-9} cal/cm^2 hr °C	-1.2×10^{-10}
ϕ	0.0000151	$\partial k_s/\partial \phi$	0.00139 cal/cm hr °C	2.09×10^{-8}

TABLE C-5

INFLUENCE COEFFICIENTS AND ESTIMATED MEASUREMENT ERRORS IN DETERMINATION OF SURFACE TEMPERATURE DEPRESSION

Measured Parameter	Estimated Measurement Error	Influence Coefficient (Symbol)	Influence Coefficients (Value)	Error in T_d (°C)
$\dot{M}$	0.00002 g/hr	$\partial T_d/\partial \dot{M}$	-58.5 °C hr/g	-0.001
A	13.8 cm^2	$\partial T_d/\partial A$	8.61×10^{-5} °C/cm^2	0.001
ϕ	0.0000151	$\partial T_d/\partial \phi$	3123 °C	0.043
u	0.01 cal/cm^3 hr	$\partial T_d/\partial u$	7.1×10^{-5} °C cm^3 hr/cal	7.1×10^{-7}
R	0.1 cm	$\partial T_d/\partial R$	5.7×10^{-5} °C/cm	5.7×10^{-6}
τ	0.00038 cm	$\partial T_d/\partial \tau$	-16.5 °C/cm	-0.0063

APPENDIX D

ERRORS IN DETERMINATION OF RESPIRATION RATES

In order that the respiration rates (measured for purposes of the mathematical model) be applicable to the same batch of fruit; it is necessary to measure them during transpiration tests. Since the amount of respiratory carbon dioxide released per unit time from tomatoes is generally small in comparison with atmospheric carbon dioxide concentrations, accurate determination necessitates the use of large fruit samples. Furthermore, the rate of air flow through the fruit samples must be small enough to show a significant difference in carbon dioxide concentration prior to and following passage through the samples; yet large enough so as to prevent stagnant pockets of carbon dioxide in the storage space. In this research, relatively small samples of fruit are used, due to space limitations. Hence, an analysis is necessary to estimate the errors to be expected in measurement of respiration rates.

In this analysis, the experimental setup considered is similar to the setup actually used. The analysis is performed for the lowest respiration rate expected in the test. The following conditions are assumed to prevail.

Test temperature = 10°C

Air flow rate - 45 l/min

Number of fruit in test chamber = 15

Average weight of each fruit = 120 g

Rate of respiratory carbon dioxide evolution
= 18.18 mg/Kg hr

Concentration of carbon dioxide in atmosphere
= 0.0314% by volume

Density of air at 10°C and atmospheric pressure
= 1.17 g/l

The values for respiratory carbon dioxide evolution rates are calculated from data given by Lutz and Hardenburg (41) for mature green tomatoes. The errors are calculated for the two available experimental methods, presented below, in order to choose between them.

1. Infrared Analyzer Method. In this setup, one litre of air per minute is drawn from both inlet and outlet of the test chamber. The samples are passed through tubes within the analyzer, where the relative concentrations of carbon dioxide are measured by infrared absorption. Instantaneous readouts are obtained, and the respiration rates may be calculated from the results. The analyzer has a range of 1000 ppm of carbon dioxide by volume, and an accuracy of ± 1%.

In order to analyze this method, the concentrations of carbon dioxide at the inlet and the outlet are calculated.

Concentration of CO_2 at inlet = 314 ppm

Then,

Mass of CO_2 per unit mass of air at inlet

$$= \frac{314(\text{parts } CO_2) \times 44(\text{molecular weight of } CO_2)}{(10 - 314)(\text{parts of air}) \times 28.97(\text{molecular weight of air}}$$

$= 0.0004771$ g CO_2/g air

Mass flow rate of air = 45(l/min) × 1.17(g/l) × 60(min/hr)

= 3159 g/hr

Mass of CO_2 in inlet air = 0.0004771 × 3159(g/hr)

= 1.51 g/hr

Mass of tomato sample = 15 × 120(g) = 1880 g = 1.8 Kg

Mass of CO_2 added to air stream every hour

= 1.8(Kg) × 18.18(mg/Kg hr)

= 32.724 mg/hr

Then,

Mass of CO_2 per unit mass of air at outlet

$$= \frac{1.51(g) + 0.03274(g)}{3159(g)} = 0.0004884 \text{ g} \cdot CO_2/\text{g} \cdot \text{air}$$

This corresponds to a carbon dioxide outlet concentration of 321.4 ppm. Thus,

Difference to be measured by analyzer

= 321.4 - 314 = 7.4 ppm

This quantity is too low for the accuracy of the analyzer. Thus, this method of measurement is unsatisfactory.

2. Gravimetric Method. In this setup, one litre per minute of air is drawn both from inlet and outlet of the test chamber. The air streams are dried, and then passed through carbon dioxide absorbents. The change in weights of the absorbents (after a 24-hour test period) are measured to determine the differences between inlet and outlet due to respiration. The most accurate balance available weighs with an accuracy of up to ± 0.0001 g. The analysis is as follows.

Mass of CO_2 absorbed from inlet sample in 24 hr

$= 1440(1 \text{ day}) \times 1.17(g/l) \times 0.0004771(g\ CO_2/g \text{ air})$

$= 0.8037$ g

Mass of CO_2 absorbed from outlet sample in 24 hr

$= 1440(1/\text{day}) \times 1.17(g/l) \times 0.0004884(g\ CO_2/g \text{ air})$

$= 0.8228$ g

Difference in absorption

$= 0.8228 - 0.8037$

$= 0.0191$ g

Since the balance can weigh with an accuracy of up to ± 0.0001 g, this method is more suitable for the determination of respiration rates.

APPENDIX E

CALCULATION OF RESPIRATION RATE

The mean difference in carbon dioxide absorption between test chamber inlets and outlets at the three test temperatures are given below.

Test Temperature	Difference in CO_2 Absorption
10.4°C	0.0591 g/day
13.4°C	0.0692 g/day
16.0°C	0.0821 g/day

A sample calculation is presented below for the reading at 10.4°C. The following parameters are known.

Mass of fruit in test chamber (M_f) = 1.91 Kg

Density of air at 10.4°C (ρ_a) = 1.17 g/l

Rate of air flow through test chambers (v_t) = 14.2 l/min

Rate of air flow through absorption bottles (v_a) = 1 l/min

The respiration rate may be calculated from these values by assuming that the difference in CO_2 absorption is due to respiratory carbon dioxide.

Increase in mass fraction of air in passing through the test chamber

$$= \frac{0.0591 \text{ (g/day)}}{v_a(\text{l/min}) \cdot \rho_a(\text{g/l}) \cdot 1440(\text{min/day})}$$

$$= 0.000352$$

Total mass of air flowing through test chamber in 24 hours

$$= v_t(\text{l/min}) \cdot \rho_a(\text{g/l}) \cdot 1440(\text{min/day})$$

$$= 23857 \text{ g/day}$$

Total mass of CO_2 released by fruit sample in 24 hours

$$= 0.000352 \times 23857(\text{g/day})$$

$$= 0.8398 \text{ g/day}$$

Rate of CO_2 evolution from fruit

$$= \frac{0.8398(\text{g/day}) \times 1000(\text{mg/g})}{24(\text{hr/day}) \times 1.91(\text{Kg})}$$

$$= 18.42 \text{ mg/Kg hr}$$

Next, this quantity is multiplied by a conversion factor of 220, which is obtained from equation 4-2, and which represents the heat production rate per unit carbon dioxide evolution rate in BTU/ton day/(mg/Kg hr).

Thus, the heat generation rate

$$= 18.42(\text{mg/Kg hr}) \times 220(\text{BTU Kg hr/mg ton day})$$

$$= 4050 \text{ BTU/ton day}$$

To determine the rate of heat generation per unit volume, another conversion factor from equation 4-2 is used.

$$\text{Heat generation rate} = 18.42(\text{mg/Kg hr}) \times 2.55(\text{cal/mg } CO_2) = 46.94 \text{ cal/Kg hr}$$

Since the density of fruit is the same as that for water (1 gm/cm^3),

$$u = \frac{46.94(\text{cal/Kg hr}) \times 1(\text{g/cm}^3)}{1000(\text{g/Kg})}$$

$$= 0.04694 \text{ cal/cm}^3 \text{ hr}$$

APPENDIX F

ESTIMATION OF FRACTIONAL PORE AREA

A sample calculation is presented for illustration of the method of initial estimation of ϕ. The calculation is from equation 4-25, where

$$\phi = \frac{\tau}{\delta\left(\left(\frac{p_s - p_\infty}{\dot{m}}\right) - \frac{1}{h_d}\right)} \tag{4-25}$$

From the results presented in Table 2, the lowest transpiration rate and apparent vapor pressure difference are the following.

$\dot{m} = 0.0348$ mg/cm^2 hr

$p_{sa} - p_\infty = 1.1011$ mm Hg

To account for variations between individual samples, the value of the transpiration rate is taken as the value obtained from the curve of best fit, as represented by equation 5-1. Thus, for an apparent vapor pressure difference of 1.1011 mm Hg, we have, from equation 5-1:

$\dot{m} = 0.0412$ mg/cm^2 hr

For purposes of initial estimation, the assumption is made that the evaporating surface is at the ambient temperature due to low rates of moisture loss, and hence, low evaporative cooling effects.

$$p_s = p_{sa} \tag{F-1}$$

The values of the other parameters in equation 4-25 are listed below:

τ = 0.00598 cm

δ = 0.8616 mg/cm hr mm Hg

h_d = 0.6779 g/cm^2 hr mm Hg

The value for δ has been determined from equation 4-27 and converted to the appropriate units. The value for h_d is determined from air velocity measurements and equation 4-1.

Substitution of the parameter values into equation 4-25 yields the initial estimate of ϕ

ϕ = 0.0003012

This estimate is based on the assumption regarding p_s, and will be corrected to account for evaporative cooling and respiratory heating effects.

APPENDIX G

ESTIMATION OF THERMAL CONDUCTIVITY OF PORE MATERIAL

An initial estimate of k_s is obtained by comparing the transpiration rate obtained from the empirical equation 5-1, and the linear model. The difference is attirbuted to the surface temperature depression due to evaporative cooling. A sample calculation is presented.

The linear model is obtained from equation 4-25 by assuming the surface to be at ambient temperature. Thus,

$$\dot{m}_1 = \frac{(p_{sa} - p_\infty)}{\frac{\tau}{\delta \cdot \phi} + \frac{1}{h_d}} \tag{G-1}$$

where

$\dot{m}_1$ = linear model prediction of transpiration rate

The values of the parameters on the right hand side of the equation are as follows.

τ = 0.00598 cm

δ = 0.8616 mg/cm hr mm Hg

h_d = 0.6779 mg/cm^2 hr mm Hg

ϕ = 0.0003012 (see Appendix F)

The calculation of transpiration rate can be made for any one value of water vapor pressure difference at which evaporative cooling is significant. An apparent vapor pressure difference of 4 mm Hg is chosen for calculation, at a storage temperature of 10.4°C. Using these values for the parameters, and substituting in equation G-1, we have the linear model prediction.

$$\dot{m}_1 = 0.1656 \text{ mg/cm}^2 \text{ hr}$$

Using equation 5-1 for the curve of best fit, the actual transpiration rate is obtained.

$$\dot{m} = 0.1467 \text{ mg/cm}^2 \text{ hr}$$

The difference between the two predictions is assumed to be due to evaporative cooling effects that are ignored in the linear model. Thus, the value of $\dot{m}$ obtained is used in equation 4-25 to determine the true value of vapor pressure difference. This procedure yields

$$p_s - p_\infty = 3.5427 \text{ mm Hg}$$

The vapor pressure reduction due to evaporative cooling is then determined.

$$(p_s - p_\infty) - (p_s - p_\infty) = 4.0 - 3.5427 = 0.4573 \text{ mm Hg}$$

From psychrometric data (and correcting for the presence of solutes), the surface temperature reduction corresponding

to the vapor pressure reduction is determined. For an ambient temperature of 10.4°C, the surface temperature depression is

$$T_s - T_b = -0.74°C$$

Next, we have from equation 4-13

$$k_s = \frac{\beta}{\log_e \left[\frac{(T_s - T_b)}{\alpha} + 1 \right]} \qquad \text{(G-2)}$$

where

$$\alpha = \frac{\left[\frac{u \cdot R}{3} - \frac{L \cdot \dot{m}_p}{} \right]}{C_p \cdot \dot{m}_p}$$

$$\beta = C_p \cdot \dot{m}_p \cdot \tau$$

$$\dot{m}_p = \frac{\dot{m}}{\phi}$$

The values of the parameters on the right hand side of equation G-2 are all known and are listed below.

$u = 0.04694$ cal/cm^3 hr

$R = 2.88$ cm (mean value for all samples)

$L = 590$ cal/g

$\dot{m}_p = 0.487$ g/cm^2 hr

$C_p = 0.44$ cal/g°C

Using these values in equation G-2, an initial estimate of k_s is obtained.

k_s = 1.434 cal/cm hr °C

This value of k_s is merely a first estimate, and corrections are to be made using the procedure outlined in Appendix H.

Calculation of the value of k_s from the transpiration rates of individual samples may yield misleading results. Variations in transpiration rate of individual tomatoes at the same vapor pressure difference may be due to variations in ϕ as well as k_s. Thus, the calculation for k_s is performed only on a single transpiration rate, and the value obtained is considered to be representative of all pore material. Thus, no standard deviation values are presented for k_s.

APPENDIX H

CORRECTION OF INITIAL SKIN PARAMETER ESTIMATES

The values of ϕ and k_s obtained from the procedures detailed in Appendices G and H must be corrected since they merely represent first estimates. The procedure involves use of equations 4-25 and 4-13 in an iterative manner. The equations are listed below.

$$\dot{m} = \frac{(p_s - p_\infty)}{\frac{\tau}{\delta \cdot \phi} + \frac{1}{h_d}} \tag{4-25}$$

$$T_s = T_b + \frac{\left(\frac{u \cdot R}{3} - L \cdot \dot{m}_p\right)}{C_p \cdot \dot{m}_p} \cdot \left[\exp\left(\frac{C_p \cdot \dot{m}_p \cdot \tau}{k_s}\right) - 1\right] \tag{4-13}$$

The procedures for the initial estimation of ϕ and k_s involved the use of two points on the curve of best fit. The point used for the estimation of ϕ is termed point A, and that for estimation of k_s, point B. Next, using the values of the other parameters presented in Appendices F and G, predictions for transpiration rates at points A and B are made from equations 4-25 and 4-13. The objective is

to fit the two points on the curve as closely as possible by appropriate readjustment of ϕ and k_s. Using the initial estimates, we obtain the first prediction.

$$\dot{m}(\text{at point A}) = 0.0388 \text{ mg/cm}^2 \text{ hr}$$
$$\dot{m}(\text{at point B}) = 0.1103 \text{ mg/cm}^2 \text{ hr}$$

The actual transpiration rates are

$$\dot{m}(\text{at point A}) = 0.0412 \text{ mg/cm}^2 \text{ hr}$$
$$\dot{m}(\text{at point B}) = 0.1467 \text{ mg/cm}^2 \text{ hr}$$

First, the value of ϕ is incremented so that a closer fit is obtained for point A only. By a trial and error procedure,

$$\phi = 0.000317$$
$$\dot{m}(\text{at point A}) = 0.0397 \text{ mg/cm}^2 \text{ hr}$$

It is found that further increases in the value of ϕ make little difference in the prediction for point A, while resulting in values for point B that are far too high. Thus, this value of ϕ is taken to be the representative mean value. The prediction for point B, using this value of ϕ and the initial estimate k_s is

$$\dot{m}(\text{at point B}) = 0.1253 \text{ mg/cm}^2 \text{ hr}$$

The values of k_s are then incremented to obtain the best fit for point B. The best value is

k_s = 1.652 cal/cm hr °C

$\dot{m}$(at point B) = 0.1463 mg/cm^2 hr

Thus, the values obtained for simultaneous best fit of points A and B are used in the model.

ϕ = 0.000317

k_s = 1.652 cal/cm hr °C

APPENDIX I

PREDICTION OF TRANSPIRATION RATE

The equations 4-25 and 4-13 are used iteratively in predicting transpiration rates. A sample calculation is presented for an apparent vapor pressure difference of 5 mm Hg, and a storage temperature of 16°C. The equations used are

$$\dot{m} = \frac{(p_s - p_\infty)}{\frac{\tau}{\delta \cdot \phi} + \frac{1}{h_d}} \tag{4-25}$$

$$T_s = T_b + \frac{\left(\frac{u \cdot R}{3} - L \cdot \dot{m}_p\right)}{C_p \cdot \dot{m}_p} \cdot \left[\exp\left(\frac{C_p \cdot \dot{m}_p \cdot \tau}{k_s}\right) - 1\right] \tag{4-13}$$

$$\dot{m}_p = \frac{\dot{m}}{\phi} \tag{4-6}$$

The values of the parameters are

τ = 0.00598 cm

δ = 0.8914 mg/cm hr mm Hg

ϕ = 0.000317

h_d = 0.6779 mg/cm^2 hr mm Hg

u = 0.06740 cal/cm^3 hr

L = 590 cal/g

$R = 2.88$ cm

$C_p = 0.44$ cal/g

$k_s = 1.652$ cal/cm hr °C

$T_b = 16$°C

$p_{sa} = 13.359$ mm Hg

$p_\infty = 8.359$ mm Hg

The first estimate is obtained by using the apparent vapor pressure difference in equation 4-25 to calculate $\dot{m}$. The result is presented below.

$\dot{m} = 0.2142$ mg/cm^2 hr

This value of $\dot{m}$ is now substituted into equation 4-13 via equation 4-6 to obtain a value for T_s. The result is

$T_s = 14.56$°C

Equation 4-28 is used to determine the saturation vapor pressure at T_s, and equation 4-29 is used to correct this value to account for the presence of solutes. The result is

$p_s = 12.176$ mm Hg

This value is then substituted back into equation 4-25 and the procedure repeated. The second iteration yields

$\dot{m} = 0.1634$ mg/cm^2 hr

$T_s = 14.89$°C

$p_s = 12.447$ mm Hg

The third iteration yields

$\dot{m}$ = 0.1750 mg/cm^2 hr

T_s = 14.82°C

p_s = 12.385 mm Hg

Convergence is obtained on the seventh iteration, at which stage the parameters stabilize to the following values.

$\dot{m}$ = 0.1731 mg/cm^2 hr

T_s = 14.84°C

p_s = 12.397 mm Hg

REFERENCES

1. Adato, I. and S. Gazit. Water deficit stess, ethylene production and ripening in avocado fruits. Plant Physiology, Vol. 53, 1974, 45-46.

2. Apeland, J. and H. Baugerod. Factors affecting weight loss in carrots. ACTA Hortic. (Symposium on Vegetable Storage, Vollebekk, Aug. 1969), 1971, No. 20, 92-97.

3. Appleman, C. O., W. D. Kimbrough and C. L. Smith. Physiological shrinkage of potatoes in storage. Bull. 303, Maryland Agr. Exp. Sta., 1928, 159-175.

4. Ben-Yehoshua, S. Gas exchange, transpiration and the commercial deterioration in storage of orange fruit. Jour. Amer. Hort. Sci., Vol. 94, No. 5, Sept. 1969, 524-528.

5. Butchbaker, A. F., W. J. Promersberger and D. C. Nelson. Respiration and weight losses of potatoes during storage. N. Dak. Farm Res., Vol. 30, No. 3, Jan./Feb. 1973, 33-40.

6. Chambers, T. C. and J. V. Possingham. Studies of the fine structure of the wax layer of sultana grapes, Aust. J. Biol. Sci., Vol. 16, 1963, 818-825.

7. Christopher, E. P. and S. A. Pieniazek. Visible shriveling of fruits. 55th Rhode Island Agr. Exp. Sta. Ann. Report, Jun. 1943, 44-47.

8. Côme, D. Influence of seeds on moisture loss in apples during refrigerated storage. Annexe. 1970-3, Bulletin. International Institute of Refrigeration, 1970, 279-286.

9. Côme, D. Influence des graines sur la conservation des pommes golden delicious. Ecrait du Proxes-verbal de la Séance du 17 Juin 1970, 869-886.

10. Côme, D. Influence des graines sur la perte. D'eau Des Pommes du Cours Leningrad, Supplement au Bulletin de L'institut International du Froid. Annexe, 1970-3, 1970.

11. Côme, D. Influence des graines sur la transpiration et l'evolution de la coloration des pommes aprés la recolte. Comptes Rendus du Quatre-Vingt-Tpeizieme Congres National des Societes Savantes Tours, 1968, Paris Bibliotheque National, 1970.

12. Côme, D. Relation entre le nombre de pepins des pommes (variette reinelte du mans) et la perte d'eau de celles-ci au cours de l'entreposage. Extrait de la Revue du Froid, No. 9, Sept. 1962.

13. Comin, D. and W. Junnila. Water loss from vegetables in storage. Ohio Agric. Expt. Sta. Bul., No. 243, 1946, 159-166.

14. Dypolt, T. Determination of transpiration rates of green peppers. M.S. Thesis, University of Florida, Department of Agricultural Engineering, 1972.

15. Edwards, D. K., V. E. Denny and A. F. Mills. Transfer processes. McGraw-Hill, New York, 1929.

16. Ezell, B. D. and M. S. Wilcox. Loss of carotene in fresh vegetables as related to wilting and temperature. Agric. and Food Chemistry, Vol. 10, No. 2, 1962, 124-126.

17. Ezell, B.D. and M.S. Wilcox. Loss of vitamin C in fresh vegetables as related to wilting and temperature. Agric. and Food Chemistry, Vol. 7, No. 7, 1959, 507-509.

18. Fockens, F. H. and H. F. TH. Meffert. Biophysical properties of horticultural products related to loss of moisture during cooling down. Jour. Sci. Fd. Agric., Vol. 23, 1972, 285-298.

19. Gac, A. Contribution to the study of the influence of the relative humidity and of the rate of circulation of air on the behavior of harvested fruit. La Revue Generale du Froid, Vol. 33, 1956, 365-379, 505-531, 621-626, 733-744, 833, 843, 963-979.

20. Gac, A. Influence of the relative humidity of air on the loss of weight of harvested fruits during storage and ripening. Proc. 9th Int'l Cong. Refrign., 1955, 4012-4018, 4042-4045.

21. Gac, A. Weight losses in cold storage products. Comptes Rendus Hebdomadaires des Seances de L'academie D'Agriculture de France (equations on wt. loss as function of Rh; in French), Vol. 57, No. 11, 1971, 907-914.

22. Geankoplis, C. J. Mass transport phenomena. Holt, Rinehart and Winston, New York, New York, 1972.

23. Gentry, J. P. A procedure for rapidly determining transpiration rates and epidermal permeabilities of fruits. Ph.D. Thesis, Michigan State University, East Lansing, Michigan, 1970.

24. Ghani, A. I. The effect of different relative humidities on the change in weight of table grapes. M.S. Thesis, Davis, Calif., 1953.

25. Goldovskii, A. M. On causes of bad influence of water loss by juicy vegetable raw materials in storage, Izv Byssh Ucheb Zaved Tishch Teknol, Vol. 6, 1971, 16-19.

26. Golovkin, N. A. and M. P. Kuzmin. Retaining the quality and decreasing the weight loss during cold storage of apples. Institut International du Froid, Annexe-3, Leningrad, 1970, 267-270.

27. Gorini, F. L. and Z. Zanetti. La perdita di peso in alcune pomacee (researches about the weight loss in apples and pears), Annali Istituto Sperimentale per La Valorizzazione Technologia Dei Prodotti Agricoli, Vol. 3, 1972, 1-13.

28. Grncarevic, M. and F. Radler. The effect of wax components on cuticular transpiration model experiments, Planta, Vol. 75, 1967, 23-27.

29. Hall, C. W. Drying of farm crops. Agriculture Consulting Associates, Ann Arbor, Michigan, 1957.

30. Harvey, E. M. Changes in lemons during storage as affected by air circulation and ventilation. USDA Tech. Bull. No. 908, 1946, 1-32.

31. Hoffman, J. C. Morphological variations of snap bean pods associated with weight loss and wilting. Proc. Amer. Sco. Hort. Sci., Vol. 91, 1967, 294-303.

32. Holdsworth, S. D. Heat and mass transfer in the low temperature preservation of food. Annexe. 1970-3, Bulletin, International Institute of Refrigeration, 1970, 47-62.

33. Horrocks, R. L. Wax and the water vapor permeability of apple cuticle, Nature, Vol. 23, 1964, 547.

34. Hylmo, B., T. Persson, C. Wikberg and W. C. Sparks. The heat balance in a potato pile. 1. The influence of the latent heat of the removed water, the temp. dist. at intermittent ventilation. ACTA Agriculturae Scandinavica, Vol. 25, 1975.

35. Iritani, W. M., L. Weller and C. A. Pettibone. Factors influencing weight loss in storage, unnumbered reprint.

36. Jason, A. C. A study of evaporation and diffusion processes in the drying of fish muscle. Fundamental aspects of the dehydration of food stuffs. Soc. of Chem. Ind., 1958, 103-135.

37. Karmarkar, D. V. and B. M. Joshi. The relation of the size of the fruit to the loss of weight in storage. Indian J. Agr. Sci., Vol. 10, No. 6, 1940, 1021-1029.

38. Keenan, J. H., F. G. Keyes, P. G. Hill and J. G. Moore. Steam tables: Thermodynamic properties of water, including vapor, liquid and solid phases. John Wiley and Sons, New York 1969.

39. Lentz, C. P. and E. A. Rooke. Rates of moisture loss of apples under refrigerated storage conditions, Food Conditions, Food Technology, Vol. 18, No. 8, 1964, 119-121.

40. Leonard, E. R. Studies in tropical fruits and preliminary observations on transpiration during ripening. Ann. Bot. Lond., Vol. 5, 1941, 89-119.

41. Lutz, J. M. and R. E. Hardenburg. The commercial storage of fruits, vegetables, and florist and nursery stocks, Handbook 66, United States Department of Agriculture, 1968.

42. Mann, G. The control of relative humidity in cold stores. I. The loss of water from perishable produce during storage, Inst. Refrig. (London) Proc., Vol. 50, 1954, 177-191.

43. Martin, R. L. J. and G. L. Stott. Physical factors involved in the drying of sultana grapes, Aust. J. Agric. Res., Vol. 8, 1957, 444-454.

44. Martynova, L. V. and V. Z. Zhadan. Transpiration resistance coefficient for tubers of some pomological potato varieties, Soviet Plant Physiol., Vol. 16, No.2, Mar./Apr. 1969, 230-282.

45. Maxie, E. C. Effect of fruit structure and temperature on water loss. Proc. Fruit and Vegetable Perishables Handling Conference, University of California, Davis, 1954, 63-64.

46. Meffert, H. F. TH. Observations on weight loss of fruit during cold storage and transport, Annexe. 1970-3, Bulletin. International Institute of Refrigeration, 1970, 307-320.

47. Mitchell, F. G., R. Guillou and R. A. Parsons. Commercial cooling of fruits and vegetables, California Agric. Expt. Sta. Manual 43, 1972, 44 p.

48. Mohsenin, N. N. Thermal properties of foods and agricultural materials, Part II. Thermal conductivity, diffusivity, unit surface conductance, coefficient of thermal expansion and applications. The Pennsylvania State University, May 1978.

49. National Research Council. International critical tables, Vol. V. McGraw-Hill, New York 1929.

50. Pieniazek, S. A. External factors affecting water loss from apples in cold storage, Refrig. Eng., Vol. 44, No. 3, 1942, 171.

51. Pieniazek, S. A. Maturity of apple fruits in relation to rate of transpiration, Proc. Amer. Soc. Hort. Sci., Vol. 42, 1943, 231-237.

52. Pieniazek, S. A. Physical characters of the skin in relation to apple fruit transpiration, Plant Phys., Vol. 19, 1944, 529-636.

53. Pieniazek, S. A. A study of factors influencing the rate of transpiration of apple fruits. Ph.D. Thesis, Cornell University, Ithaca, New York, 1942.

54. Platenius, H., F. S. Jamison and H. C. Thompson. Studies on cold storage of vegetables, New York (Cornell) Agr. Expt. Sta. Bul. No. 602, 1934, 24 p.

55. Possingham, J. V., T. C. Chambers, F. Radler and M. Grncarevic. Cuticular transpiration and wax structure and composition of leaves and fruit of vitis vinifera, Aust. J. Biol. Sci., Vol. 20, 1967, 1149-1153.

56. Prokof'ev, A. A., K. M. Kats and B. A. Rybalova. Interrelation between transpiration and metabolism of fruits, in Russia Sostoianie Vody I Vodny Obmen U Kulturnykh Rastenii, 1971, 95-102.

57. Radler, F. Reduction of loss of moisture by the cuticle wax components of grapes, Nature, Vol. 207, 1965, 1002-1003.

58. Risch, E. and E. L. Watson. Effect of postharvest treatment on the rate of weight loss from tomatoes during storage, unpublished, 1979.

59. Robinson, J. E., K. M. Browne and W. G. Burton. Storage characteristics of some vegetables and soft fruits, Ann. Appl. Biol., Vol. 81, 1975, 399-408.

60. Ryall, A. L. and J. M. Harvey. The cold storage of vinifera table grapes, USDA Agr. Handbook, No. 159, 1959, 46 p.

61. Ryall, A. L. and W. J. Lipton. Handling transportation and storage of fruits and vegetables, Vol. 1, Vegetables and Melons. The AVI Publishing Company, Westport, Connecticut, 1972, 1-19.

62. Sastry, S. K., C. D. Baird and D. E. Buffington. Transpiration rates of certain fruits and vegetables, ASHRAE Transactions, No. 2484, 1978, 237-255.

63. Schaper, L. A. and D. E. Hudson. Biological and engineering factors affecting white potato losses in storage, ASAE Paper No. 71-377.

64. Schippers, P. A. Biological characteristics of the potato in relationship to the storage environment, unpublished.

65. Schippers, P. A. The influence of curing conditions on weight loss of potatoes during storage, American Potato Journal, Vol. 48, No. 8, Aug. 1971, 272-286.

66. Smith, A. J. M. Evaporation from apples, Gt. Btn. Dep. Sci. Ind. Res. Food Invest. Bd. Rpt. for 1931, 1932, 152-153.

67. Smith, A. J. M. Evaporation from foodstuffs, Gr. Brit. Dept. Sci. Ind. Research Report of the Food Inves. Board for the Year 1932, 117-138.

68. Smith, A. J. M. Evaporation from plums, Great Britain Dept. Sci. Ind. Res. Food Invest. Board Rept., 1935, 152-153.

69. Smith, W. H. Evaporation from apple in relation to temperature and atmospheric humidity, Ann. Appl. Biol., Vol. 20, 1933, 220.

70. Smith, W. H. Internal factors determining rate of loss of water from fruit, Dept. Sci. Indus. Res. (Great Britain) Rpt. for 1931, 1932, 206-107.

71. Smith, W. H. Loss of water from fruit, Dept. Sci. Indus. Res. Food Investigation Board (Great Britain), Rpt. for 1930, 1931, 55-61.

72. Smock, R. M. and A. M. Neubert. Apples and apple products. Interscience Publishers, New York, 1950, 95-105.

73. Talbot, T. Transpiration rates of snap green beans. M.S. Thesis, University of Florida, 1973.

74. Tompkins, R. G. The conditions produced in film packages by fresh fruits and vegetables and the effect of these conditions on storage life, J. Applied Bacteriol., Vol. 25, No. 2, 1962, 290-307.

75. vandenBerg, L. and C. P. Lentz. Moisture loss of vegetables under refrigerated storage conditions, Food Tech. J., Vol. 4, No. 4, 1971, 143-144.

76. Villa, L. G. Single particle convective moisture loss from horticultural products in storage. Ph.D. Thesis, Michigan State University, East Lansing, Michigan, 1973.

77. Wardlaw, C. W. and E. P. Leonard. Studies in tropical fruits. 1. Preliminary observations on some aspects of development, ripening and senescence, with special reference to respiration, Ann. Bot., Vol. 50, 1936, 621-653.

78. Wardlaw, C. W. and E. R. Leonard. Studies on tropical fruits. IX. The respiration of bananas during ripening at tropical temperatures, Ann. Bot., Vol. 4, 1940, 269-316.

79. Wells, A. W. Effects of storage temperature and humidity on loss of weight by fruit, U.S. Dept. Agric. Mktg. Res. Rpt. 539, 1962, 15 p.

80. Wilkinson, B. G. Some effects of storage under different conditions of humidity on the physical properties of apples, Jour. of Hort. Sci., Vol. 40, 1965, 58-65.

81. Wills, R. H. B. and K. J. Scott. Effect of water loss from apples during cool storage on the water content of the fruit, Jour. Sci. Food Agric., Vol. 23, No. 9, 1972, 1135-1136.

82. Wright, R. C., J. I. Lauritzen, and T. M. Whiteman. The effects of storage temperature and humidity on the keeping quality of onions, Proc. Amer. Soc. Hort. Sci., Vol. 29, 1932, 1933, 463-465.

BIOGRAPHICAL SKETCH

Sudhir Kartikeya Sastry was born on November 30, 1952, in Bangalore, India. He attended elementary school in the same city.

His high school education was at the Bishop's School, Poona, India. He graduated from high school in December, 1968, and entered the Indian Institute of Technology, Kharagpur, India, in July, 1969. He received the degree of Bachelor of Technology in agricultural engineering in June, 1974. He entered graduate school in September, 1974, at the University of Florida, and received the degree of Master of Science in agricultural engineering in June, 1976. Since then, he has pursued the degree of Doctor of Philosophy in mechanical engineering.

He is unmarried at the present time.

I certify that I have read this study and that in my opinion it conforms to acceptable standards of scholarly presentation and is fully adequate, in scope and quality, as a dissertation for the degree of Doctor of Philosophy.

Gerald L. Zachariah, Chairman
Professor of Mechanical Engineering

I certify that I have read this study and that in my opinion it conforms to acceptable standards of scholarly presentation and is fully adequate, in scope and quality, as a dissertation for the degree of Doctor of Philosophy.

C. Direlle Baird
Associate Professor of Agricultural Engineering

I certify that I have read this study and that in my opinion it conforms to acceptable standards of scholarly presentation and is fully adequate, in scope and quality, as a dissertation for the degree of Doctor of Philosophy.

Dennis E. Buffington
Associate Professor of Agricultural Engineering

I certify that I have read this study and that in my opinion it conforms to acceptable standards of scholarly presentation and is fully adequate, in scope and quality, as a dissertation for the degree of Doctor of Philosophy.

Chung K. Hsieh
Professor of Mechanical Engineering

I certify that I have read this study and that in my opinion it conforms to acceptable standards of scholarly presentation and is fully adequate, in scope and quality, as a dissertation for the degree of Doctor of Philosophy.

Richard K. Irey
Professor of Mechanical Engineering

I certify that I have read this study and that in my opinion it conforms to acceptable standards of scholarly presentation and is fully adequate, in scope and quality, as a dissertation for the degree of Doctor of Philosophy.

Buford D. Thompson
Emeritus Professor of Horticultural Science

This dissertation was submitted to the Graduate Faculty of the College of Engineering and to the Graduate Council, and was accepted as partial fulfillment of the requirements for the degree of Doctor of Philosophy.

August 1980

Dean, College of Engineering

Dean, Graduate School